# OPERATION MANUAL

ELEVATING
WORK PLATFORMS

# NL240KTF-HV

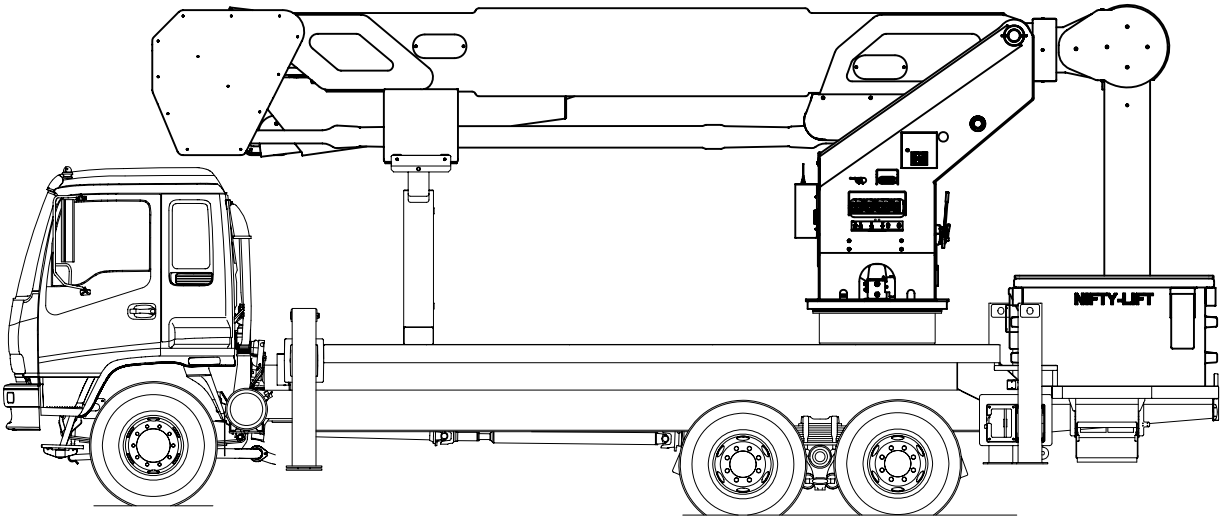


**NATIONAL HEAD OFFICE**
**42B Orchard Street**
**Kilsyth, Vic. 3137**
**Tel: +61 3 9725 0077**
**Fax: +61 3 9725 0044**
**e-mail: info@nifty-lift.com.au**
**website: www.nifty-lift.com.au**

24.04.39

# Chapter 1

## Introduction 1

### TABLE OF CONTENTS

**Subject** **Page**

OPERATOR'S RESPONSIBILITY ..... 2
SAFETY WARNINGS ..... 2
CONTACT WITH LIVE CONDUCTORS ..... 3

# OPERATOR'S RESPONSIBILITY

**IMPORTANT !**

**Before operating the machine, read and completely understand this manual and all signs on the machine. Any missing signs are to be replaced immediately. All personnel operating the machine must complete an induction training course, and be fully competent in the safe operation of this machine before use.**
**As with any machinery, death or serious injury may occur if this machine is not properly maintained. Inspection and maintenance should be performed by competent personnel familiar with mechanical procedures.**
**Before operating the machine, the operator must be sure that the machine has been properly maintained. The operator should carry out the daily inspections described in this manual.**

# SAFETY WARNINGS

× **DO NOT** ALTER OR DISABLE LIMIT/SAFETY SWITCHES OR INTERLOCKS.

× **DO NOT** USE THE TOWER IN WIND EXCEEDING A SPEED OF 12.5 m/s.

✓ **ALWAYS** WEAR A SAFETY HARNESS IN THE ELEVATING BASKET.

× **DO NOT** EXCEED THE SAFE WORKING LOAD IN THE BASKET.

× **DO NOT** USE THIS MACHINE AS A CRANE.

× **DO NOT** STAND OUTSIDE THE BASKET.

× **DO NOT** USE LADDERS, PLANKS OR ANY OTHER DEVICE ON OR IN THE BASKET TO INCREASE HEIGHT.

× **DO NOT** ANCHOR THE BASKET TO ANY STRUCTURE.

× **DO NOT** RAISE THE BASKET IF THE MACHINE IS NOT LEVELLED WITHIN THE 5° LIMIT DISPLAYED ON THE LEVEL BUBBLE.

× **DO NOT** STAND ON THE BASKET STEPS OR RIM. ALL LOADS SHOULD BE PLACED ON THE BASKET FLOOR.

× **DO NOT** USE THE EMERGENCY BASE CONTROLS UNLESS THERE IS AN EMERGENCY SITUATION.

# CONTACT WITH LIVE CONDUCTORS
## FOR LV AND HV MACHINES

NOTE

**NOTE: Please refer to this procedure in conjunction with your Energy Authority procedures.**

A breach or failure of the electrical insulation may occur if:

- **The insulation is not maintained in a suitable condition.**
- **The EWP is operated in an adverse environment.**
- **The EWP is operated near High Voltage Live Electrical Apparatus with a system voltage greater than the insulation rating.**

A breach will result in arcing and possibly fire or ionisation of the air. Carbon deposits will be deposited on the boom and this will result in degradation of the insulation.

When the EWP has suffered from a breach or failure of the insulation components the following procedures should be implemented.

- **The EWP should be immediately withdrawn from service and the surrounding area secured from unauthorised access.**

- **If necessary all pneumatic tyres should be deflated in a safe manner**.

WARNING

**High currents that may have been present during the period of contact may cause combustion of the tyres and explosion for a period of up to 24 hours.**

The EWP must be inspected by an authorised person and a structured inspection and maintenance plan implemented to verify the condition of the components that may have experienced arcing damage. Such components are typically rolling bearings (including slew rings and wheel bearings and other bushes or journals that lie in the path of the current.)

Where the EWP has experienced fire or ionisation of the surrounding air the insulator surfaces should be thoroughly cleaned and subject to an acceptance test prior to use. In the case of fire all hydraulic hoses and electrical wiring lying in the heat path should be inspected and replaced if damaged.

# Chapter 2

| Technical Data | 2 |
|---|---|

## TABLE OF CONTENTS


**Subject** **Page**

FLIGHT ENVELOPE ..... 2

# NL240KTFHV

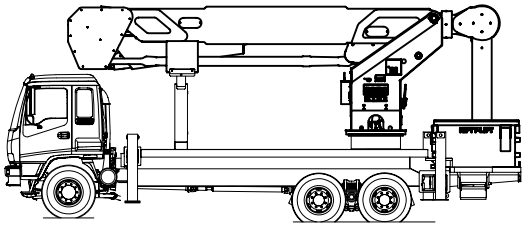

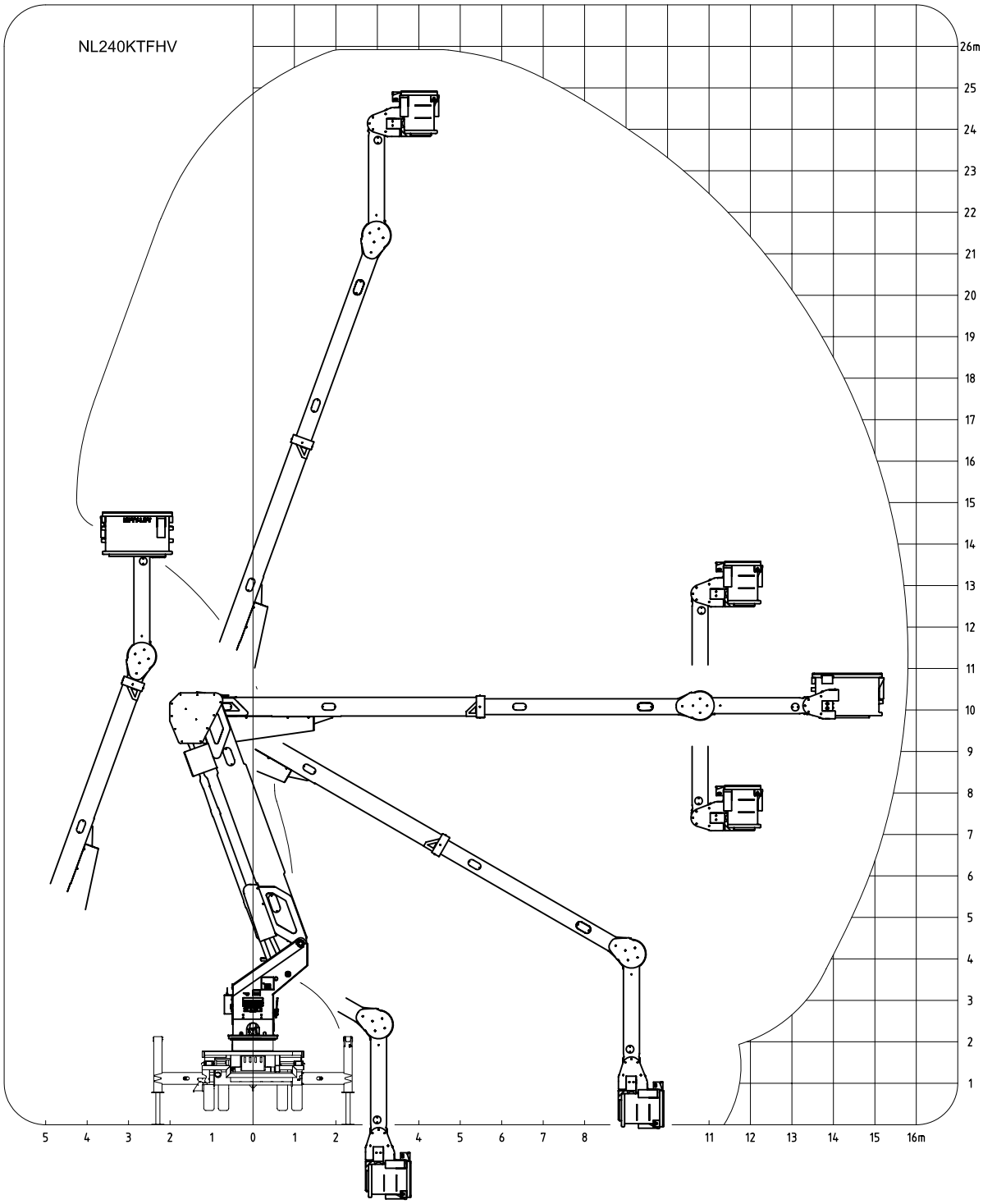


NATIONAL HEAD OFFICE
42B Orchard Street, Kilsyth, Vic. 3137
Tel: +61 3 9725 0077 Fax: +61 3 9725 0044
e-mail: info@nifty-lift.com.au
website: www.nifty-lift.com.au

24.04.40

# Chapter 3

| Operation | 3 |
|---|---|

## TABLE OF CONTENTS

**Subject** **Page**


TRAVELLING ..... 2
SETTING UP ON LOCATION ..... 2
STARTING THE VEHICLE FOR TOWER USE ..... 3
Stabiliser Leg Operation ..... 4
Emergency Stop Buttons ..... 6
TOWER OPERATION ..... 7
Using the Turret Base Controls: ..... 8
RADIO REMOTE CONTROLS ..... 10
NBB RADIO REMOTES ..... 11
AUTEC RADIO REMOTES ..... 13
HETRONIC RADIO REMOTES ..... 15
Hydraulic Power Tools (If fitted) ..... 17
Basket Tools (Optional) ..... 17
Chassis Tools (Optional) ..... 17
EMERGENCY CONTROL SYSTEMS ..... 18
1: Accumulator ..... 18
2: Emergency DC Pump for tower operation ..... 18
3: Emergency DC Pump for stabilisers ..... 18
4: Manual Basket Levelling ..... 19
5: Emergency Hand Pump ..... 20
6: Emergency Manual Bleed Down ..... 21
7: Manually Slewing the Tower ..... 22

# TRAVELLING

**IMPORTANT !**

- Booms must always be stowed and secured when travelling to and from work sites.
- Ensure that loose items on the vehicle tray are properly secured.
- Do not allow anyone on the vehicle tray or in the basket during road travel.

# SETTING UP ON LOCATION

- Use the range chart of the work platform geometry to determine the best position of the vehicle for each particular job.
- Site the vehicle on firm ground (avoid embankments, sewers/underground services and soft soil/clay.)
- If the area is sloping, always face the vehicle up the incline and not at right angles to the slope.
- Set the vehicle brakes and use wheel chocks.

# USING THE CANBUS DASH MOUNTED SCREEN
## (IF FITTED)

This vehicle is fitted with a push button screen to notify the operator of the status of the elevating work platform at all times while the truck is in use.

Pushbuttons are available on the screen to turn on the PTO, Work lights, Revolving beacons and other optional customer specified items.

The status of various truck mounted devices and tower interlocks are displayed on the screen. When the tower is correctly packed up, no warning alarms will be displayed whilst driving. If a safety device is triggered whilst the tower is in use, the appropriate alarm will be activated.

If the tower shuts down whilst in use and the reason is not known by the operator, the screen will display the reasoning for disabling the tower functions. The computer is permanently watching the status of all the switches on the truck and can notify the operator immediately where a fault or out of sequence function is detected.

**NOTE**

*"Canbus" is the terminology used to describe the entire wiring and computerised control system for the truck. It uses plug in style blocks mounted in various locations around the truck to connect all the inputs and outputs used on the vehicle. It talks digitally to the screen in the Cab and has self diagnostic capabilities. The wiring is far more robust and simplified over traditional automotive wiring; the overall system has programmed intelligence, resulting in a safer Elevating Work Platform.*

# STARTING THE VEHICLE FOR TOWER USE

- Turn the ignition on and wait until the engine diagnostic/auto check is completed.
- Make sure the air tanks are charged.
- Ensure the handbrake is on.
- Ensure that the truck is in Neutral.
- Start the truck engine.
- Engage the PTO (Power Take Off). The PTO light should illuminate. Manual trucks require the Handbrake to be On, The clutch In, and Brake air tanks charged, before the PTO switch will operate.
- If the PTO is cable shift, ensure the clutch is in prior to engaging or disengaging the PTO.
- Turn on work lights, beacons or directional arrows as necessary.

**NOTE** *The key must be left in the ignition, and in the "on" position while using the tower. Removing the ignition key will disengage the PTO automatically on air shifted PTO manual gearboxes. (July 2006-).*

## STABILISER LEG OPERATION

NOTE

To engage stabilisers, ensure that the tower is stowed and both boom and basket tie downs are in place and fastened.

Stabiliser Operation:

- Activate the 'Stabs Power' switch and push each of the stabiliser control levers down individually.
- Ensure that all wheels are lifted clear of the ground in an even manner.
- Ensure that all Stabiliser leg green LED Indicators are 'On' before using the tower (if fitted).

Out & Down Stabiliser Operation:

- Switch and hold the Out & Down selector switch to the desired set of stabilisers (Driver side or Passenger side). This switch also acts as the Deadman/Power switch for the Out & Down stabilisers.
- Push the desired stabiliser leg button to Extend or Retract leg(s).
- The stabilisers can then be powered up or down using the procedure above.

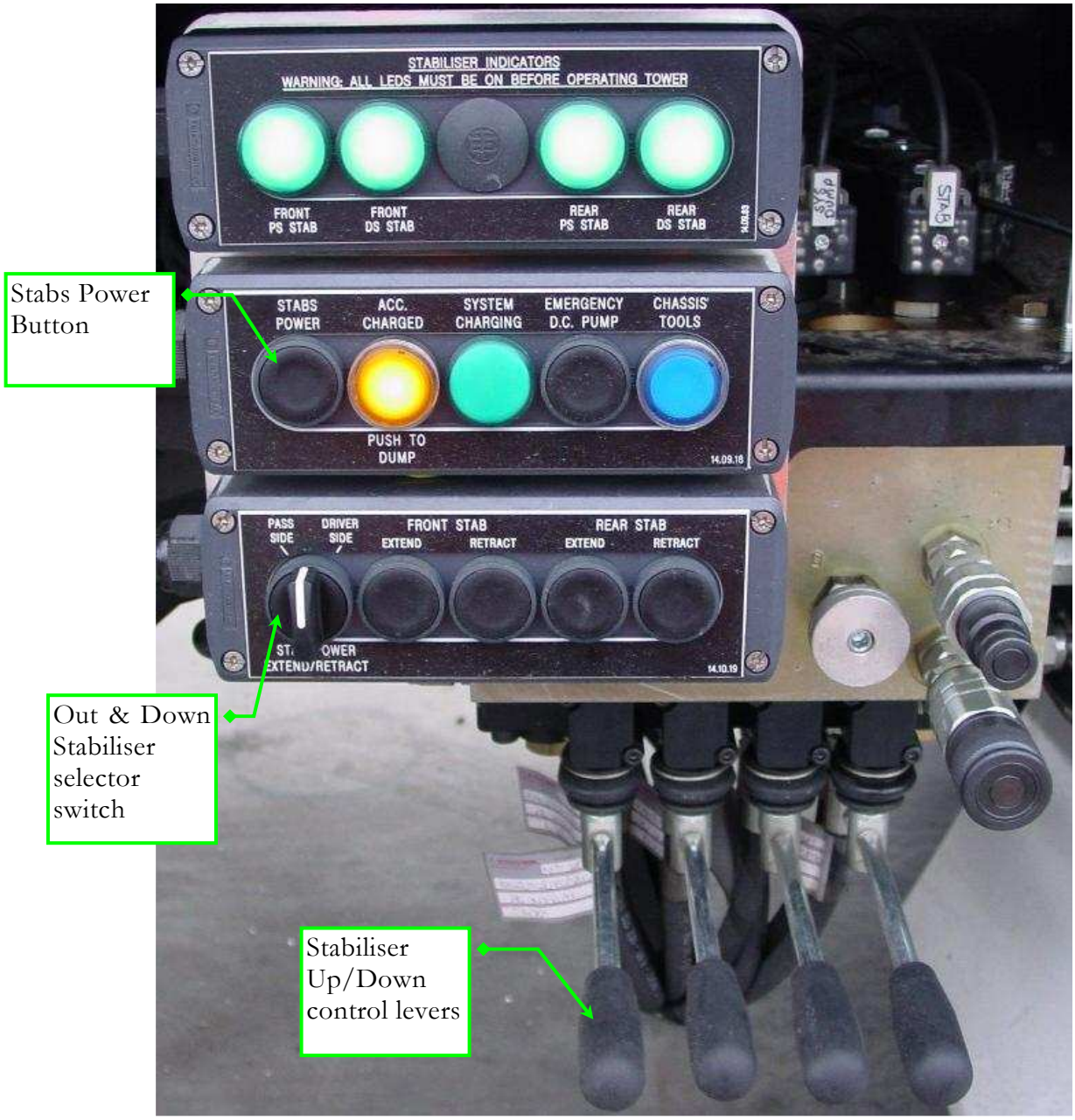


The green LED's are referred to as "Ground Sense Indicators" (optional). When all 4 stab legs are pushing up the truck, all the lights will illuminate green.

If any one of the legs is not extended and a Basket or Boom tie down strap is released, an alarm will trigger notifying the operator that the legs are not setup correctly.

**WARNING** **Care must be taken when operating stabilisers to prevent overturning of the machine. Ensure that the machine is within the safe operating range according to the 2 level bubbles. Maximum of 5 degrees**.

**IMPORTANT !** When work is completed ensure that all stabiliser legs are returned to the fully stowed position. Stow the Spring Lockouts (if engaged), and reinflate the airbag suspension (if fitted) before driving.

## EMERGENCY STOP BUTTONS

In the event of imminent danger, loss of EWP control or a serious oil leak, press any of the emergency stop buttons. There are emergency stops located on both of the rear stabiliser legs and another one on the base control cover of the work platform. Activating an emergency stop will divert all of the flow from the PTO pump back to the hydraulic tank reservoir and isolate (if fitted) all oil under pressure inside the accumulator (if fitted).

After the emergency situation has been made safe, the emergency stop may be reset. Twist the button in the direction indicated on the label. Oil flow and electrics will be restored to the system.

# TOWER OPERATION

**IMPORTANT !**

## AUTOMATIC BASKET LEVELLING SYSTEM

✓ **ALWAYS** Keep the batteries fully charged in the basket levelling system and maintained in good working order. Ensure levelling system charge plug is connected during travels to maintain battery charge.

The basket levelling system has a three position switch.

**Isolate:** Select when basket levelling is not required – system will charge batteries during this setting.

**Battery A/ Battery B:** Select to choose which battery is to power the basket levelling system. An LED will flash to indicate operation during these settings.

**NOTE:** Alternating battery selection during uses helps to ensure reasonable battery service life.

**IMPORTANT !**

Engage all stabiliser legs as previously described.

Release all boom and basket tie downs and ensure that they cannot become entangled with any part of the machine.

Ensure that the 'SYSTEM POWER' light located on the electric control panel of the base controls is illuminated. If it is not, check that no Emergency stop buttons have been pushed, and that the system switch is on in the cab.

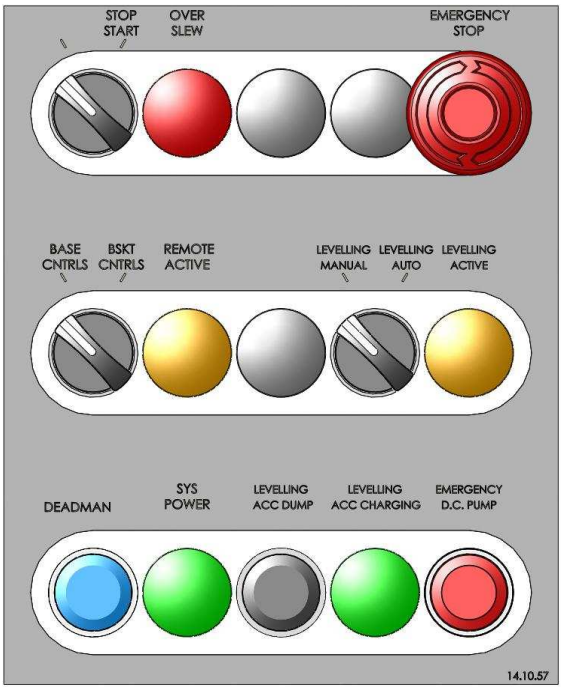


Select BASE CONTROLS or BASKET CONTROLS on the control selector switch located on the electric control panel.

## USING THE TURRET BASE CONTROLS:

**NOTE**

*The manual control handles located on the base of the machine are for Emergency use only. Eg if the radio remotes are not functioning.*

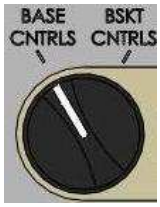


To operate the base controls (located at the turret of the machine), switch the control selector switch (located on the electric control panel on the base), to the base controls position.

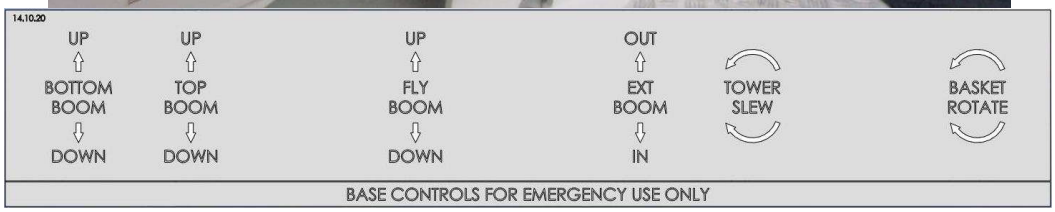


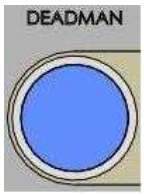


Push the 'DEADMAN' button on the electric control panel and select the desired function.

- If the tower is stowed, raise the top boom first.
- Then raise the bottom boom.
- Once the booms are clear of the truck slew or lift can be operated to move the tower to any desired position.

**REMEMBER**

The slew angle will be limited when the stabiliser legs are NOT extended out and down.

**WARNING**

**Always observe the Safe Working Load of the Basket. Failure to follow this warning may result in serious injury.**

When stowing the tower, ensure that the bottom boom is at 45 degrees and the top boom is in the horizontal position. Slew the machine, lining it up using the slew indicators (pointers) located on the pedestal. Lower the bottom boom first until it comes to rest on the boom rest. Then lower the top boom on to the top boom rest. Finally lower the fly boom down into the basket rest. Fasten all tie downs.

# RADIO REMOTE CONTROLS

Switch the control selector switch located on the electric control panel on the base to the 'BASKET CONTROLS' position.

**NOTE**

*The switch may read "BSKT CTRLS – BASE CTRLS" For Proportional Electric or pilot hydraulic Controlled baskets.*

**IMPORTANT !**

✓ **ALWAYS** Keep the batteries fully charged in both transmitters and maintained in good working order.

✓ **ALWAYS** Wear the neck harness on the Observer controller in order not to drop it.

**CAUTION**

✗ **DO NOT** high-pressure wash around the radio remote units. Water ingress will damage the units.

# NBB RADIO REMOTES

**NOTE** *The information below is provided as a brief summary of the functions available on the radio remotes. It should be read in conjunction with the manufacturers instructions supplied with the Radio Remotes and your vehicle.*

## Basket Operator Transmitter:

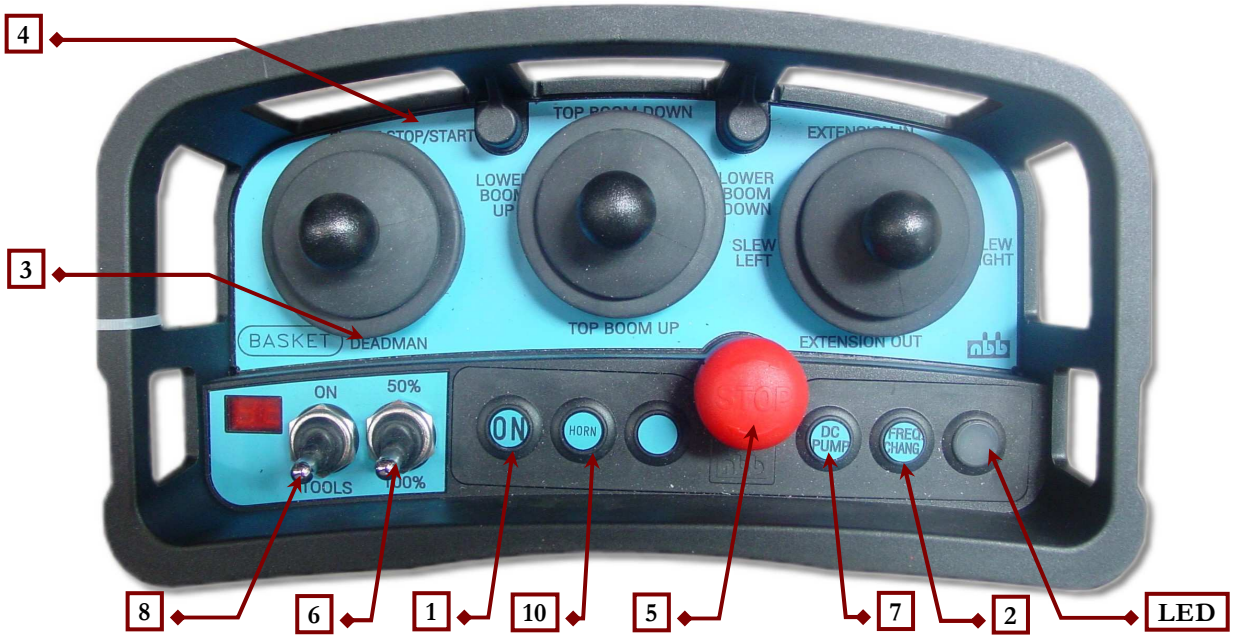


To activate the radio remote control system, reset the emergency stop button (5), located on the transmitter, by twisting it in a clockwise direction.

**1./** Once the "transmitting" LED has been flashing for approximately 5 to 10 seconds, press the ON button to energise the main relay in the receiver. The radio remote system is now ready to operate.

**2./** Press the 'FREQ. CHANGE' button. The frequency should light momentarily on the digital display on the transmitter. If the radio remote receiver receives a bad signal, or "noise" of a similar frequency to that of the transmitter, it will shut down the main relay. To correct this situation, the transmitter frequency needs to be changed. This is done by holding down the "ON" button and then depressing the "FREQUENCY CHANGE" button. The receiver will automatically find the new signal from the transmitter.

**3./** To operate the tower functions, push the 'DEADMAN' lever to the direction indicated on the sign. While holding the deadman joystick, any of the EWP functions; bottom boom lift, top boom lift, tele boom extension and slew may be operated.

**4./** Use the Start/Stop button to turn on or off the truck engine. The engine will be stopped for a minimum of 5 seconds. The engine start button will not be active until this time has elapsed.

**5./** The Emergency Stop button will shut off all electric and hydraulic functions until it is released again.

**6./** 50% / 100% changes the speed of the boom functions. Use 50% to halve the boom speeds in tight clearance situations.

**7./** DC Pump. Operates the electric emergency pump. Only use when necessary and when the truck engine is not running. Do not overuse it, it has a 4 minute duty cycle maximum,

and will cause a heavy voltage drain from the truck batteries.

**8./** Power tools. Only switch on **After** tools are fully connected. The booms will not function with tools switched on. Turn the switch off **Before** trying to disconnect tools.

**9./** When the low Battery indicator lamp lights up on the transmitter, the battery is nearly empty. The transmitter can only be operated for approximately 15 more minutes. To change the battery in the transmitter, remove the handset from its mounting cover and slide the battery out. Replace with a charged battery. Return the flat battery to the charger in the cab.

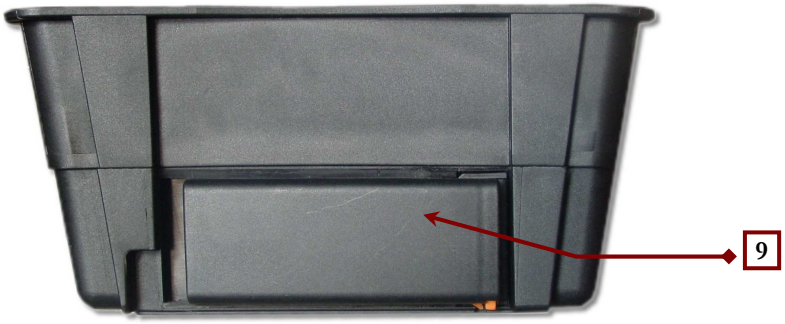


**10./** The horn can be used to sound a horn on the base of the tower in order to get the attention of the observer.

## Ground Operator Transmitter:

**11./** Press the "On" Button to turn on the Observer Transmitter. All switches and controls on the Basket Transmitter will be turned off and cease to function. All boom functions will now be available from the Observer transmitter.

**NOTE** *At all times the ground transmitter overrides all functions on the basket transmitter. To regain control on the basket transmitter, the Emergency Stop must be Reset and the "On" button pressed.*

# AUTEC RADIO REMOTES

**NOTE** *The information below is provided as a brief summary of the functions available on the radio remotes. It should be read in conjunction with the manufacturers instructions supplied with the Radio Remotes and your vehicle. (Illustrations may differ to configuration on actual handset).*

## Basket Operator Transmitter:

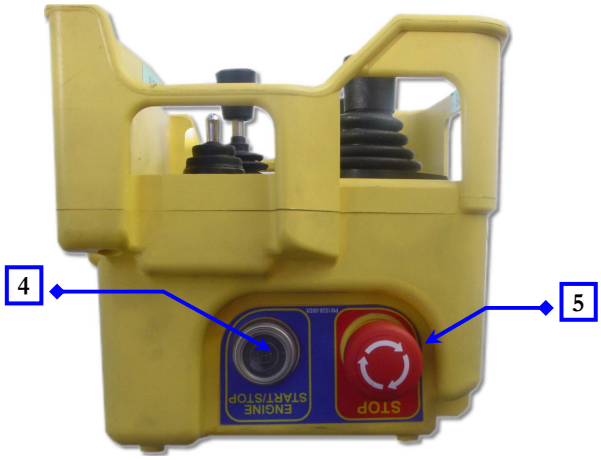


**1./** Turn Key to I (On), to turn on Radio Remote.

**2./** Press Start to frequency set the remote Transmitter and Receiver.

**3./** Push the Deadman joystick simultaneously with a Boom direction joystick to move the tower.

**4./** Use the Engine Start/Stop button to turn on or off the truck engine. The engine will be stopped for a minimum of 5 seconds. The engine start button will not be active until this time has elapsed.

**5./** The Emergency Stop button will shut off all electric and hydraulic functions until it is released again.

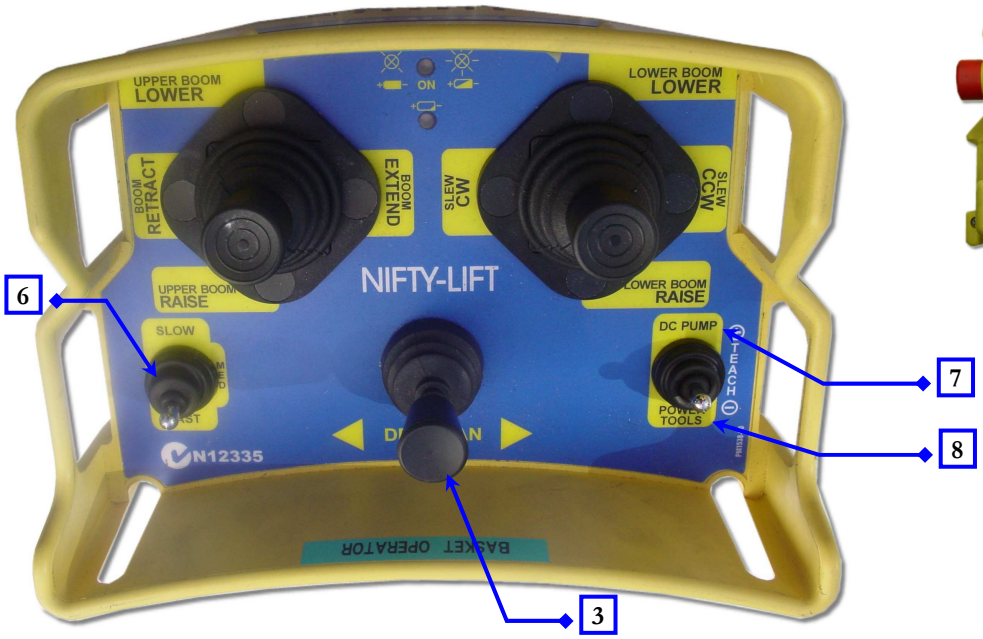


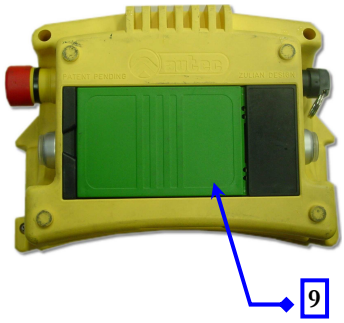


**6./** Slow/Fast changes the speed of the boom functions. Use slow to move the boom in tight clearance situations.

7./ DC Pump. Operates the electric emergency pump. Only use when necessary and when the truck engine is not running. Do not overuse it, it has a 4 minute duty cycle maximum, and will cause a heavy voltage drain from the truck batteries.

8./ Power tools. Only switch on **After** tools are fully connected. The booms will not function with tools switched on. Turn the switch off **Before** trying to disconnect tools.

9./ Change the battery underneath the transmitter when batteries are low. Return the flat battery to the charger in the cab.

## Ground Operator Transmitter:

**NOTE** *When using a system with 2 transmitters, both must be turned on and frequency set prior to use. Set the ground transmitter First, then the Basket Transmitter. A flat battery on the Ground transmitter will turn off the Basket transmitter's control.*

10./ Pressing "Observer" control turns off the Basket Transmitter and gives control the Ground Transmitter. All switches and controls on the Basket Transmitter will be turned off and cease to function. All boom functions will now be available from the Ground transmitter.

**NOTE** *"Observer" control will override the Basket transmitter even if Emergency stop is pressed on the Basket transmitter.*

11./ "Basket" Control. Restores power to the Basket Transmitter. The Ground transmitter boom functions will now cease to function. (Except for the "Basket/Observer" switch and Emergency Stop). The Basket Transmitter will need to be frequency set by pushing the "Start" button again after regaining control.

# HETRONIC RADIO REMOTES

**NOTE** *The information below is provided as a brief summary of the functions available on the radio remotes. It should be read in conjunction with the manufacturers instructions supplied with the Radio Remotes and your vehicle.*

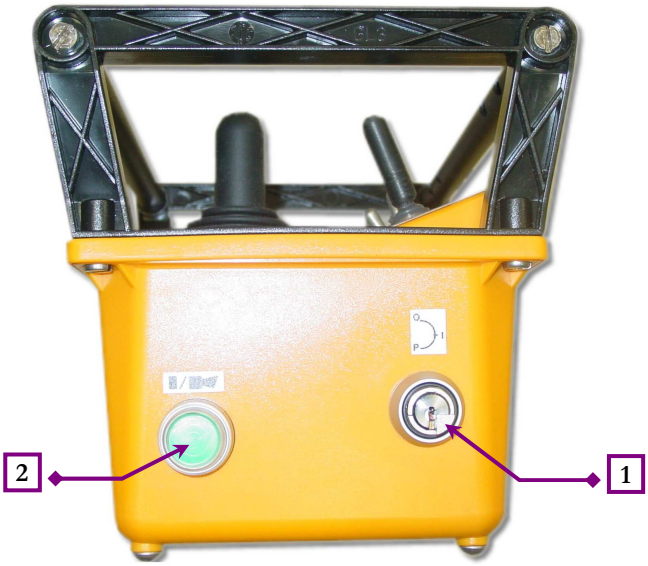


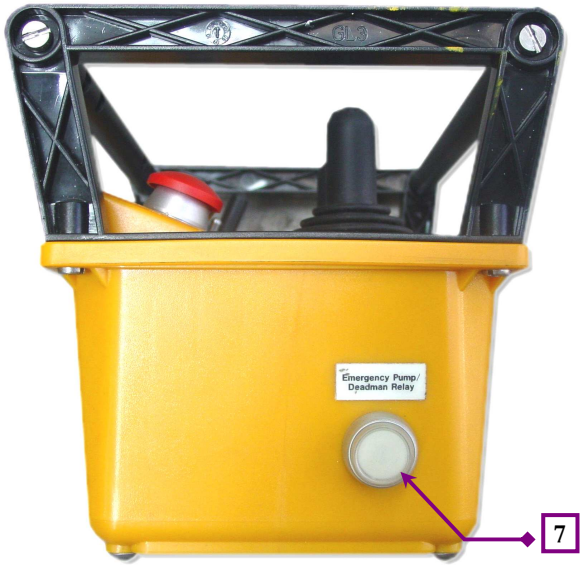


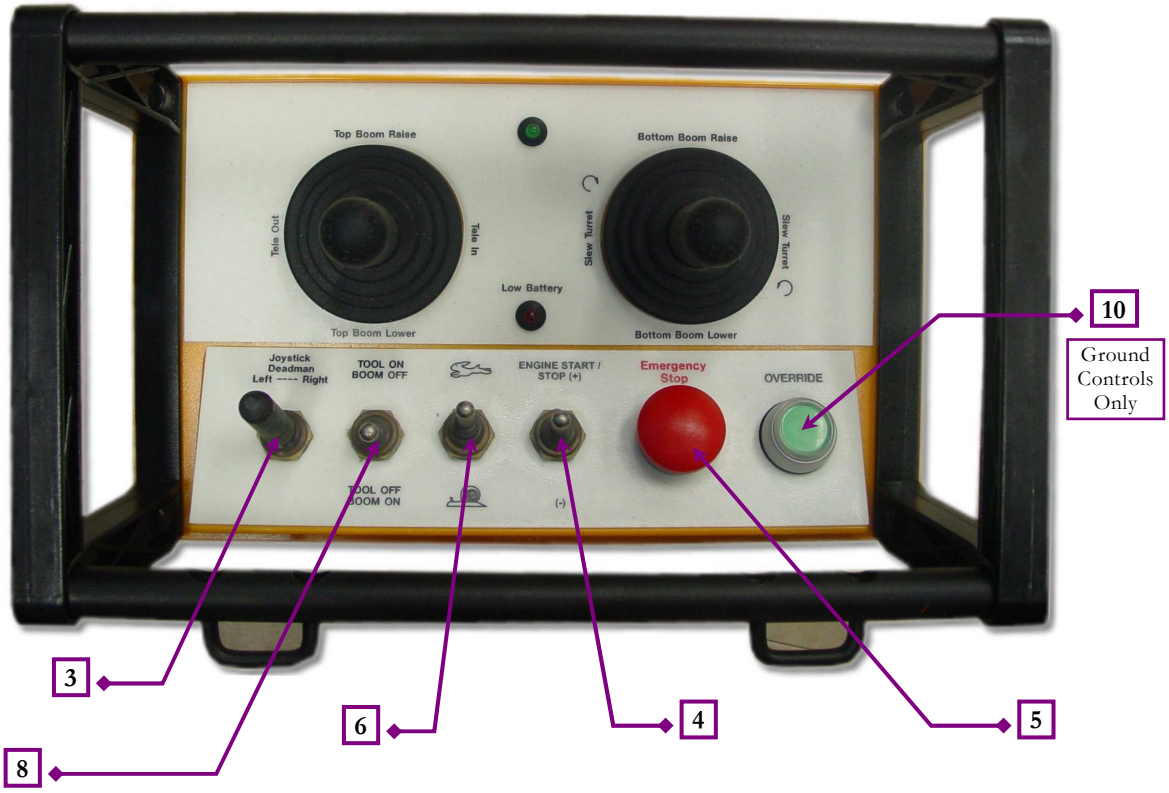

1./ Turn Key to I (On), to turn on Radio Remote.

2./ Press Start to frequency set the remote Transmitter and Receiver.

3./ Push the Deadman joystick simultaneously with a Boom direction joystick to move the tower.

4./ Use the Engine Start/Stop button to turn on or off the truck engine. The engine will be stopped for a minimum of 5 seconds. The engine start button will not be active until this time has elapsed.

5./ The Emergency Stop button will shut off all electric and hydraulic functions until it is released again.

6./ Slow/Fast (Turtle/Rabbit) changes the speed of the boom functions. Use slow to move the boom in tight clearance situations.

7./ Emergency Pump. Operates the DC electric emergency pump. Only use when necessary, and when the truck engine is not running. Do not overuse it, it has a 4 minute duty cycle maximum, and will cause a heavy voltage drain from the truck batteries.

8./ Power tools. Only switch on **After** tools are fully connected. The booms will not function with tools switched on. Turn the switch off **Before** trying to disconnect tools.

9./ Change the battery underneath the transmitter when batteries are low. Return the flat battery to the charger in the cab.

10./ Pressing "Override" on the Ground Controls turns off the Basket Transmitter and gives control to the Ground Transmitter. All switches and controls on the Basket Transmitter will be turned off and cease to function. All boom functions will now be available from the Ground transmitter. Press it again to release control back to the Basket Transmitter.

**NOTE** *"Override" will take over the Basket transmitter even if Emergency stop is pressed on the Basket transmitter.*

## HYDRAULIC POWER TOOLS (IF FITTED)

Hydraulic tool connection fitting can be located on the chassis as well as on the basket.

### BASKET TOOLS (OPTIONAL)

With the Tools switch located on the Radio Remote turned OFF, connect the power tools hoses to the quick release couplings located on the fly boom outside of the basket.

Once the tools are connected, turn the radio remote Tools switch to On. This will allow the flow of hydraulic oil to the power tool.

Adjust the speed of the tools using the needle valve, which is located near the quick release couplings outside the basket (if fitted).

**NOTE** *Turning ON the tools switch on the Radio Remote will automatically turn OFF all power to the tower movement functions from the radio remote controller.*

### CHASSIS TOOLS (OPTIONAL)

To operate the hydraulic power tools on the chassis, make sure the chassis tools button is not illuminated (ON) before connecting or disconnecting tools. To turn ON/OFF, press button.

If a ball valve is fitted to the connectors, make sure it is turned to "Connect/Disconnect" before plugging tools in. Then turn the handle to operate, and turn on the tools switch (if fitted.)

✘ **DO NOT** try to connect or disconnect tools with the Tools Switch ON. Pressure will be behind the fittings and the quick release couplings will not be able to be disconnected.

✘ **DO NOT** turn the tools switch on without tools first connected. On open hydraulic circuit trucks this will create a "no flow" situation, and the pump will be creating full system pressure and blowing off a relief. Hissing will be heard, and heat will be generated. Leaving this switch on without tools connected will eventually damage the system.

**NOTE** *If the chassis tools are being operated, and the Basket Tools are turned on, the chassis tools will turn off. Basket Tools operation overrides chassis tools. Only one set of tools can be operated at a time.*

# EMERGENCY CONTROL SYSTEMS

Nifty Lift Elevating Work Platforms can be equipped with various optional power sources which may be used to lower the basket and stow the machine in the event of vehicle engine break down.

### 1: ACCUMULATOR

If engine power is lost and cannot be regained, the booms may be brought to the stowed position, or the basket lowered to the ground, using the reserve of hydraulic fluid in the accumulator. In this situation, work platform controls may be operated, from either the basket or the base, in the same manner as when the engine is running. The accumulator, located on the vehicle, is kept charged (i.e. pressurised), while the vehicle engine is running, during normal operation of the work platform. When charged, it holds a volume of hydraulic oil, under pressure, adequate to stow the tower. In addition to stowing the tower, there may be enough oil left to raise the stabiliser legs. This depends on the initial position from which the booms are stowed.

### 2: EMERGENCY DC PUMP FOR TOWER OPERATION

If engine power is lost, the emergency pump may be used to operate the machine. To operate a boom function using the emergency pump

- Push the Emergency DC Pump button located on the electric control panel. The pump will start and the deadman activated automatically.
- Simultaneously, push or pull the required control lever on the main base control valve to the desired direction.

### 3: EMERGENCY DC PUMP FOR STABILISERS

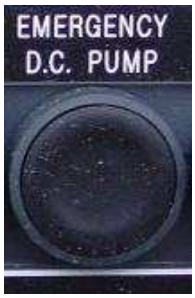


- To operate the stabiliser legs, using the emergency pump, move the stabiliser control lever, on the control valve, that corresponds to the function and direction required, and then push the emergency pump button.

- To operate the out & down stabiliser functions, switch and hold the out & down stabiliser selector switch to the corresponding set of stabilisers, and simultaneously press both the emergency pump button and desired stabiliser function button.

Do not overuse it, it has a 4 minute duty cycle maximum, and will cause a heavy voltage drain from the truck batteries.

## 4: MANUAL BASKET LEVELLING

If the automatic basket levelling system is lost (Levelling Active light is OFF), the basket can be levelled using the manual levelling procedure.

- On the electric control panel, switch to 'Levelling Manual.'
- On the electric control panel switch to 'Base Cntrls.'

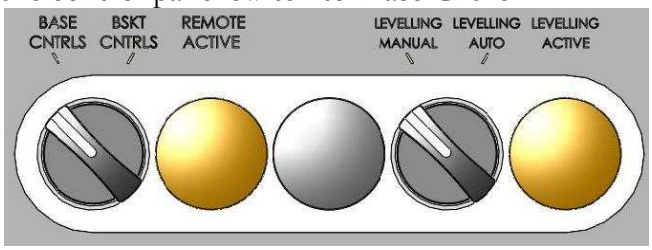


- Move the basket levelling ball valve lever to the 'Operate' position.

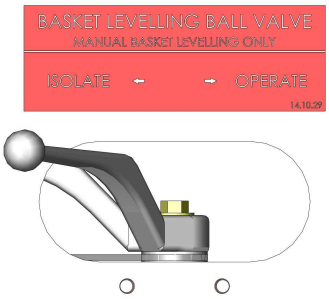


- Push or pull basket levelling lever to desired direction to level out basket.

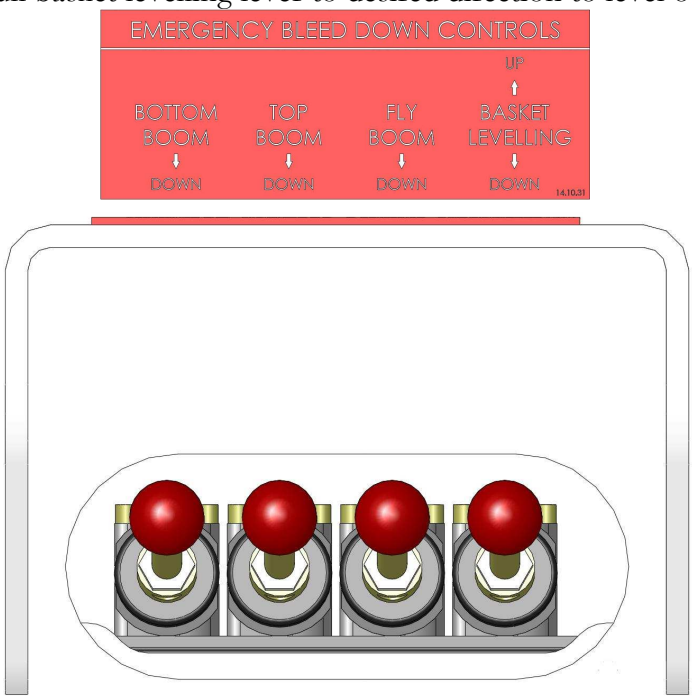


NL240KTF illustrated above

- When complete, move basket levelling ball valve to the 'Isolate' position. Switch back to 'Bskt Cntrls' and 'Levelling Auto.'

**CAUTION**

When the Basket Levelling Ball Valve is in the 'Operate' position, operating the basket levelling lever does not require pressing down the 'Deadman' button.

## 5: EMERGENCY HAND PUMP

If engine power is lost and the emergency DC pump will not operate, the emergency hand pump may be used to operate the machine and move the tower to safely lower the basket to the ground.

- Push the Hand Pump Ball Valve lever located beneath the main base control valve to the 'Base Controls' position.

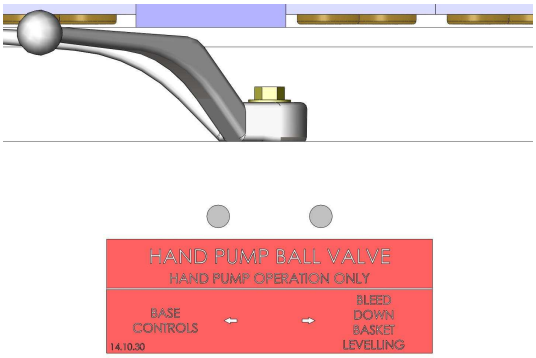


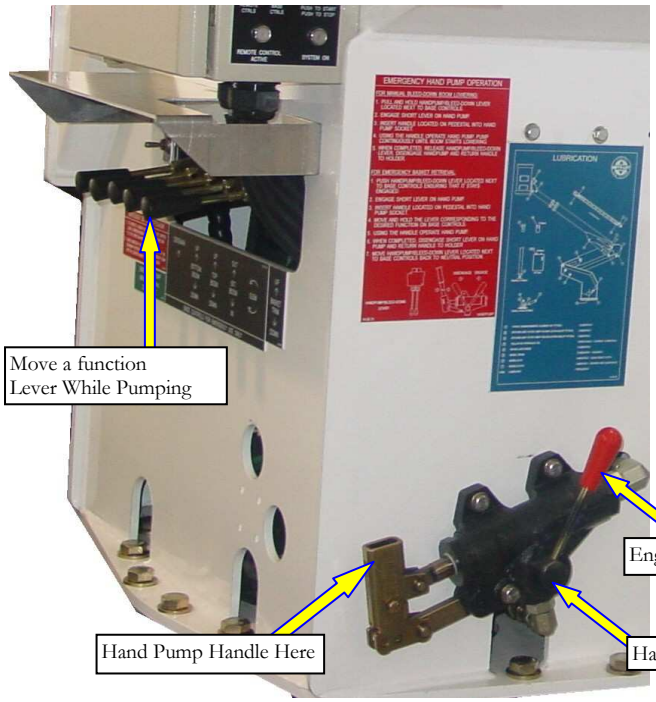


*120KDT Base Shown Above*

- Ensure that the lever on the side of the hand pump itself is in the "ENGAGE" position, i.e. pointing towards the base structure.
- Place the hand pump handle, located on the pedestal, into the socket on the pumping lever at the end of the hand pump.
- Move, and hold, the lever corresponding to the desired function and then pump the hand pump using the extension handle, located on the pedestal.
- When completed, DISENGAGE HANDPUMP.

**NOTE**

If basket is out of level, it can be manually levelled using the hand pump. To do this:

- Push the Hand Pump Ball Valve lever located beneath the main base control valve to the 'Bleed Down Basket Levelling' position.
- Move, and hold, the basket levelling lever the desired function (UP or DOWN) and then pump the hand pump using the extension handle.

## 6: EMERGENCY MANUAL BLEED DOWN

- Engage the short lever on the hand pump.
- Push the Hand Pump Ball Valve lever located beneath the main base control valve to the 'Base Controls' position.

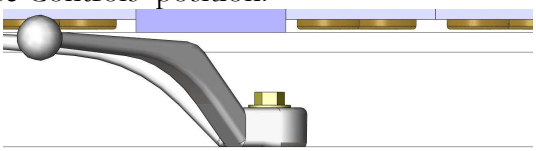

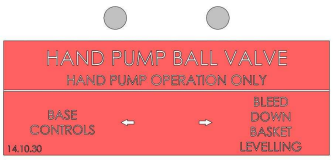


- Push and hold corresponding boom bleed down lever located above the main base control valve.

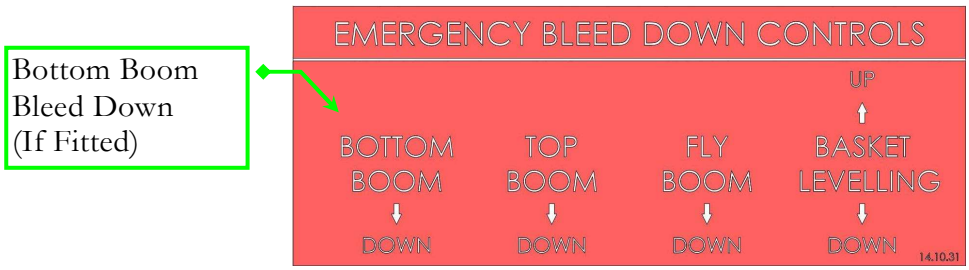


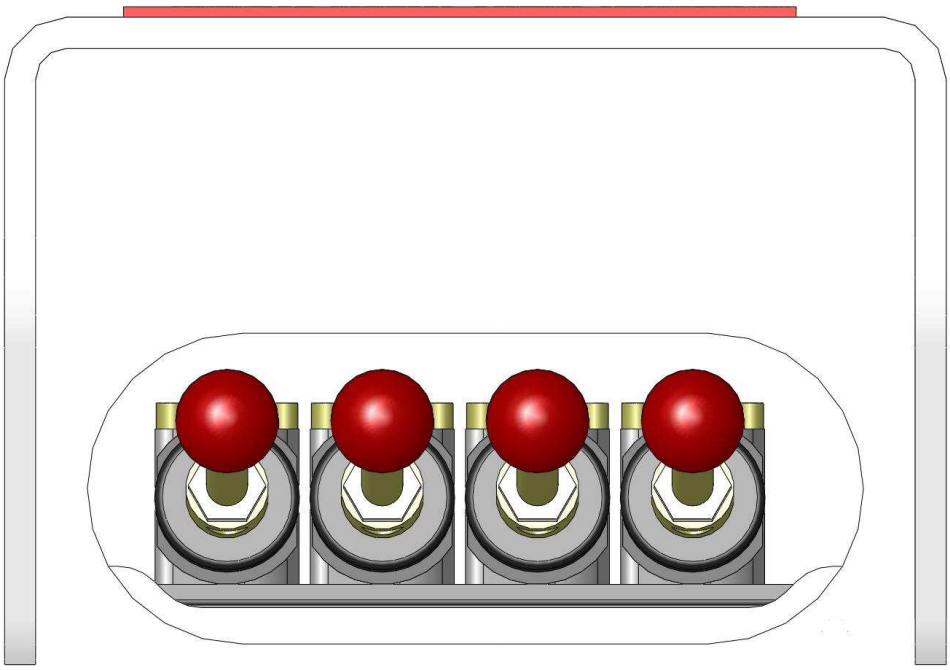

NL240KTF illustrated above.

- Using the handle operate the hand pump. Pump continuously until boom starts lowering.
- While holding boom bleed down lever push down the corresponding boom

function on the main base control valve to control the speed of descent.

**CAUTION**

When bleeding booms down, basket must be levelled accordingly using the basket levelling lever. Failure to do so may result in serious injury.

- When completed, release boom bleed down lever and DISENGAGE HANDPUMP.

**7: MANUALLY SLEWING THE TOWER**

In an emergency when using the hand pump the limited slew interlocks will be automatically bypassed in the hydraulic circuit and allow the operator to manually slew the tower back to its home position.

# NIFTY-LIFT

## INTRODUCTION TO CANBUS WIRING

ELEVATING
WORK PLATFORMS

Boucher & Boucher P/L T/A Nifty-Lift
42B Orchard Street
Kilsyth Victoria 3137
Ph: 03 9725 0077
Fax: 03 9725 0044
Email: info@nifty-lift.com.au
Web: www.nifty-lift.com.au

ABN: 32 050 197 218
ACN: 050 197 218

# CANBUS WIRING

**Canbus or 'CAN' is short for Controller Area Network. It is a computer network protocol and bus standard designed to allow microcontrollers or 'nodes' and devices to communicate with each other. It was designed specifically for automotive applications but is now also used in other areas. The Nifty-Lift canbus network is widely used and specifically designed for mobile vehicle control systems. It uses a CANopen communication protocol.**

**Benefits over traditional wiring:**

- **Networking the electrical system reduces wiring complexity.**
- **Simple diagnostic information is readily available via the display screen, reducing downtime and simplifying troubleshooting.**
- **The system can be modified and expanded easily.**
- **The in Cab screen provides a simple operator interface.**
- **Locating the Nodes in various positions around the truck allows for shorter runs of wires to sensors, switches and solenoids.**
- **The components can withstand extreme mechanical, climatic, and electrical conditions, providing reliability for a long period of time.**
- **The complexity of EWP control logic is easier to implement and change.**

# CANBUS WIRING

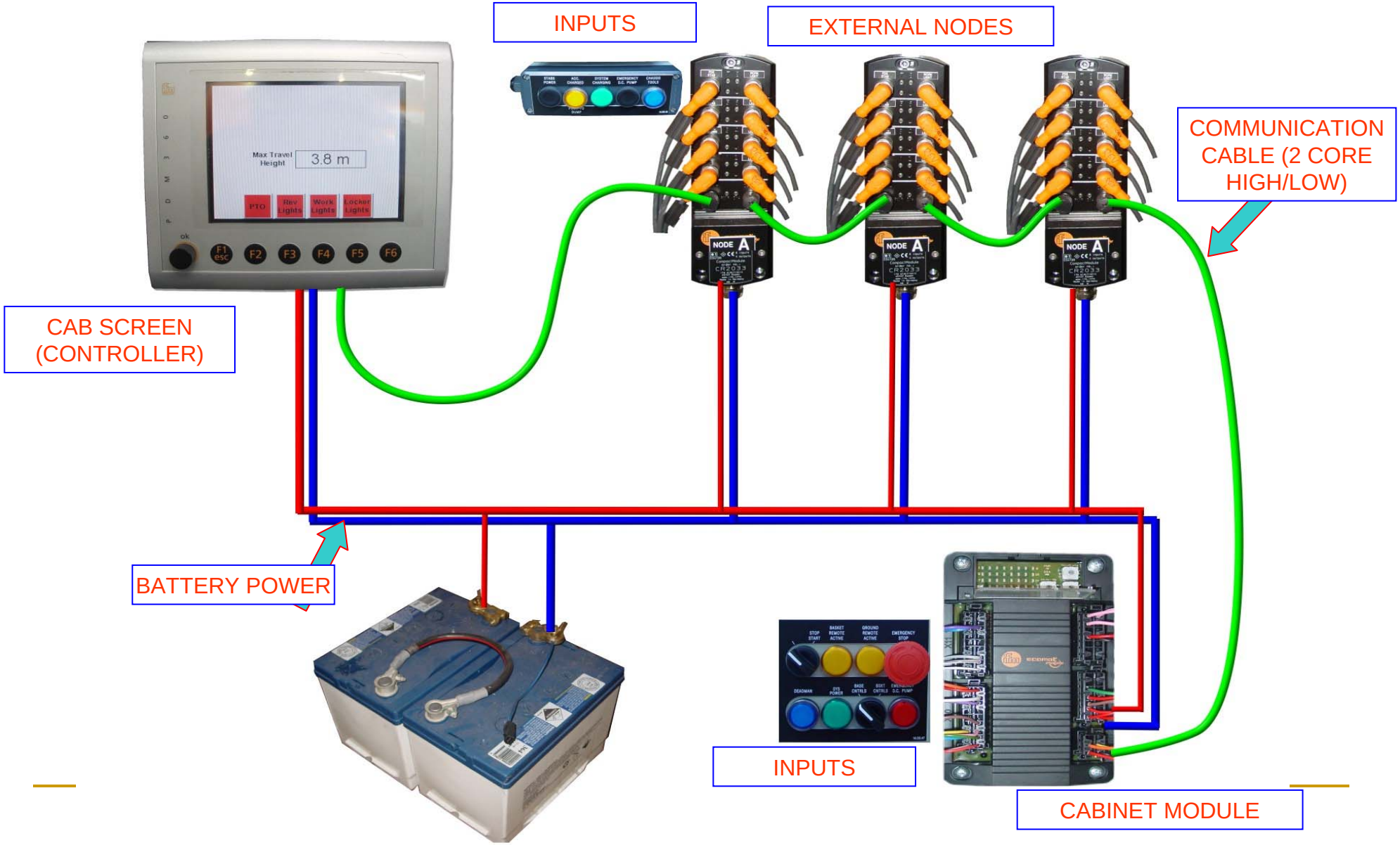

# CANBUS SCREEN

PDM360

**The PDM360 screen provides the operator interface for the EWP status.**

- **The screen contains all the control logic program for sequencing the setup and pack-up of the EWP.**
- **It does not control any EWP movements. The tower is moved via the manual hydraulic control handles, or the Radio Remote only.**
- **The display shows the status of the EWP**
- **The encoder dial marked 'OK' cab be spun to view different diagnostic pages.**
- **The 'F" buttons turn on and off various functions as marked on the screen.**

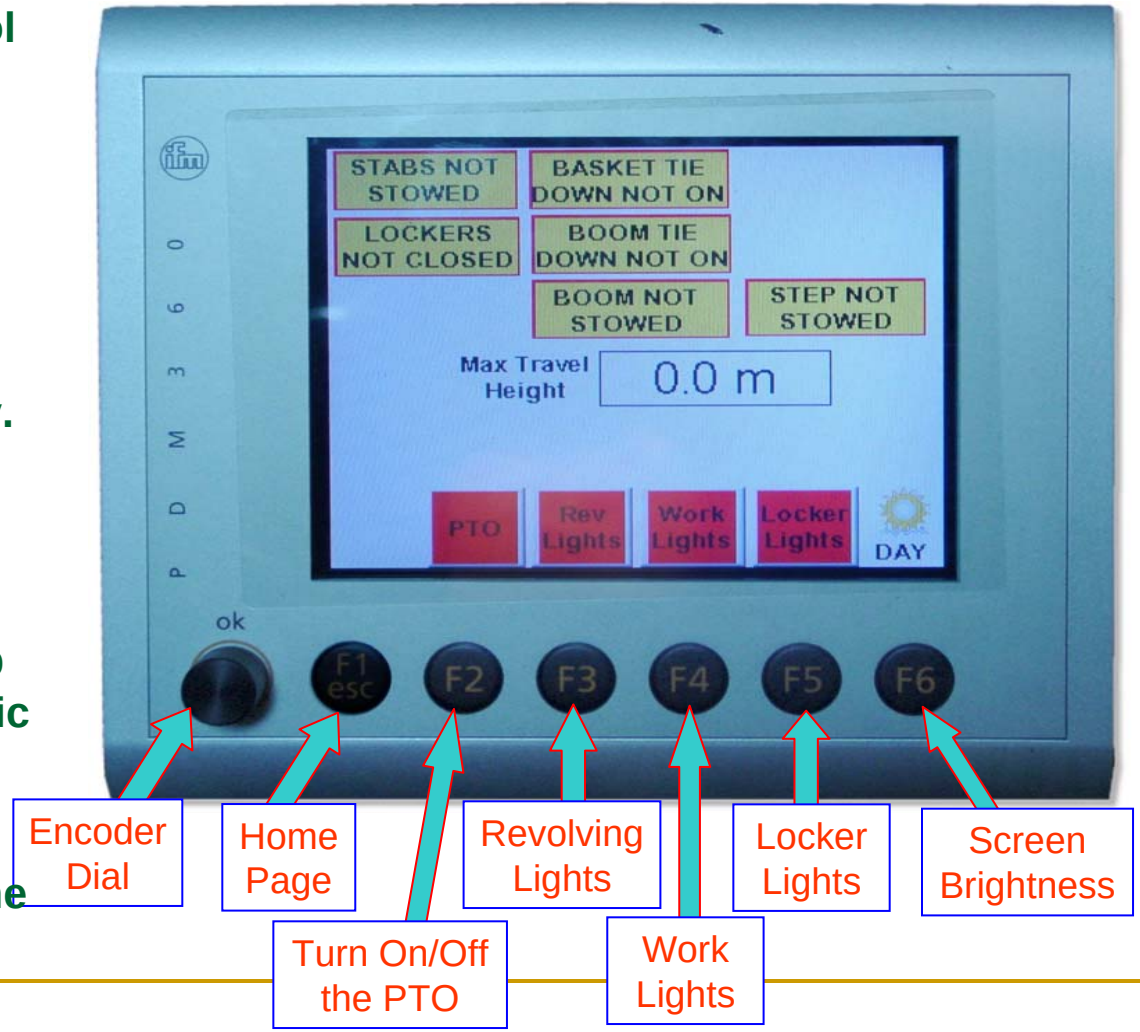

# CANBUS SCREEN

PDM360

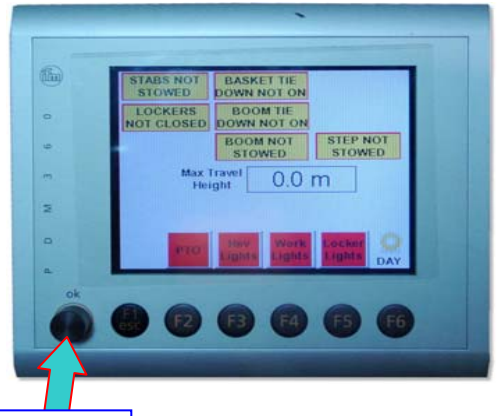


Encoder Dial

**Various diagnostic screens are available if troubleshooting is requir via the encoder dial.**

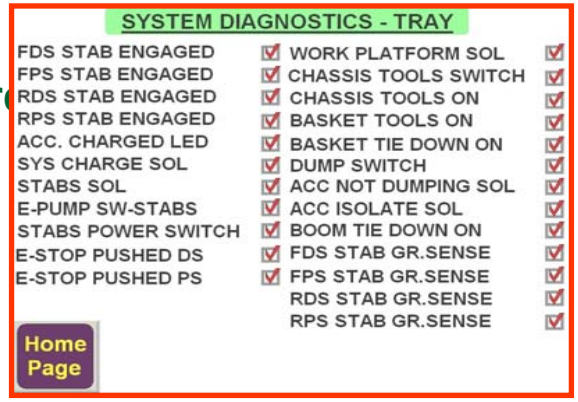


**If the EWP is disabled while in use, or tower functions do not appear to work, the screen will display the reason.**

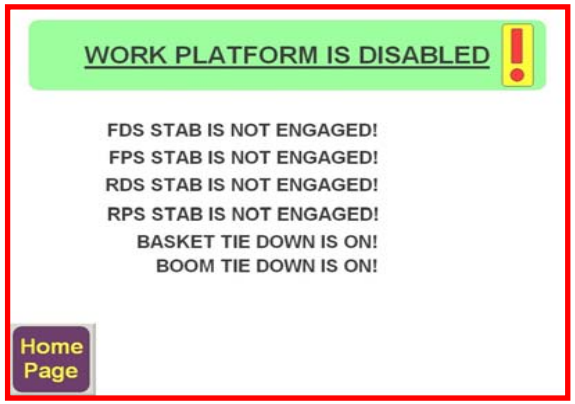


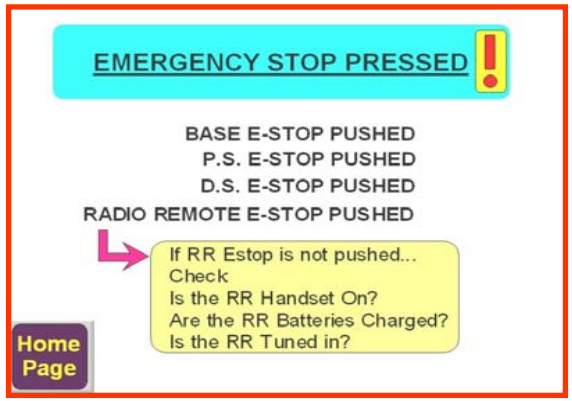


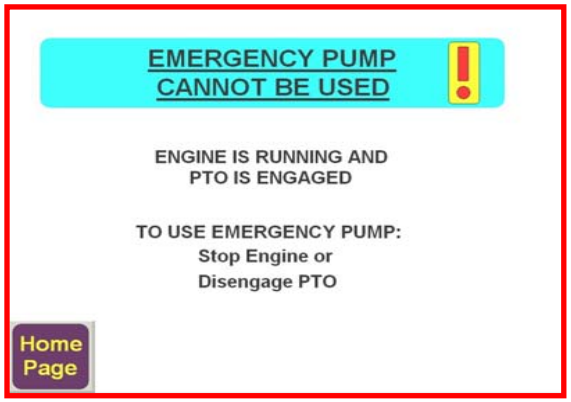

# CANBUS NODE

**These nodes have:**

- **Inputs on the LHS.**
- **Outputs on the RHS. Each output can carry a load of 4 Amps, and is overload and short circuit protected.**
- **All the external devices are attached via the screw in plugs**
- **The housing is robust aluminium and rated highly against vibration, dirt and water ingress. (IP67)**
- **In the unlikely event of a node failure, it can be easily replaced in minutes. No programming is stored within the node.**
- **All inputs and outputs are labeled for easy diagnostics.**

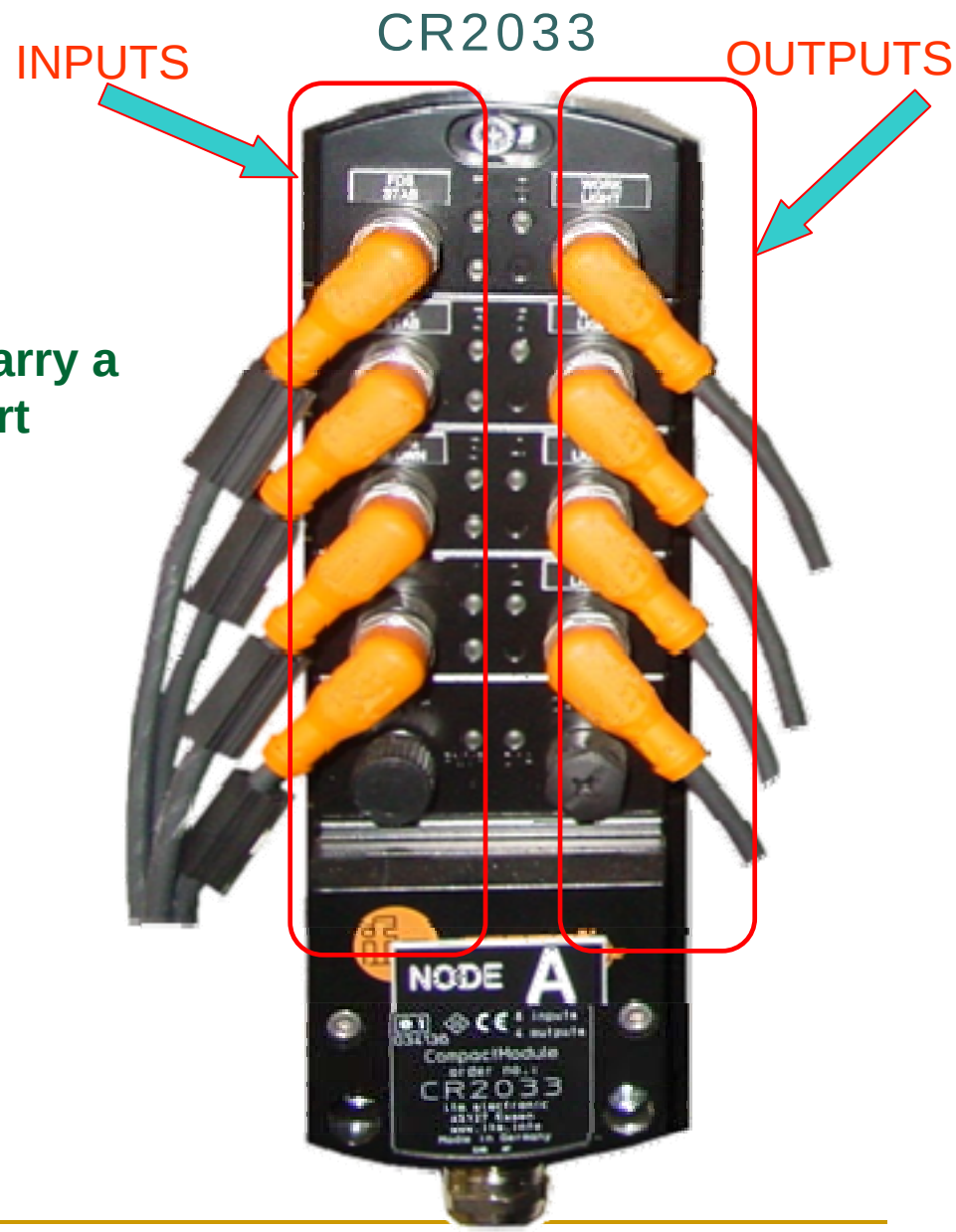

# CANBUS NODE

- **The On/Off status of each input and output is indicated by LEDS.**
- **Inputs and Outputs have orange LEDs.**
- **The communications LED is green and blinking constantly when everything is working OK.**
- **A Red LED indicates a communication error and the wiring will need to be checked for a disconnected node. The system will be shut down if the Red LED is on.**

CR2033

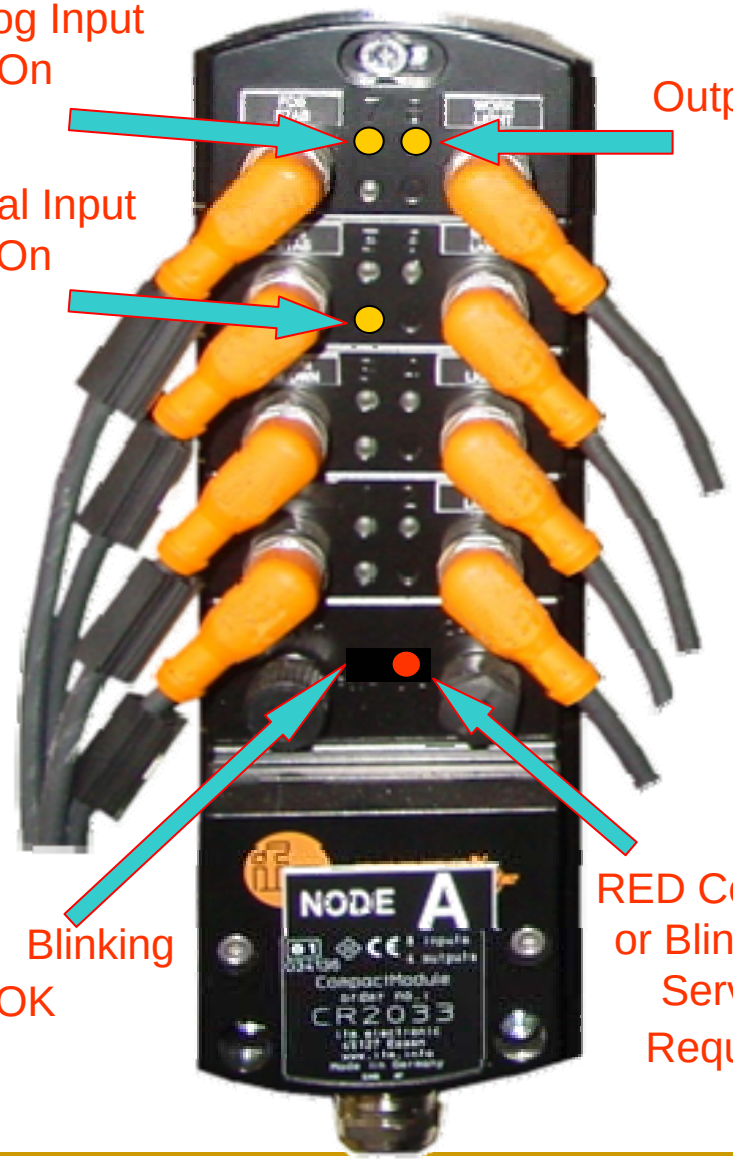

# TURRET CONTROLS

**The turret box has a canbus node inside. All the buttons are wired into the canbus inputs. The function of the buttons is similar to previous trucks, and operator retraining is not required.**

**All Emergency stop buttons are 'double pole' for added safety. One set of contacts is wired through Canbus. The second set is directly wired to cut the hydraulic oil supply when the button is pushed.**

**There is no oil supplied to the hydraulic control valve unless the Deadman button is pushed.**

**The buttons are illuminated by the program logic in the Canbus screen.**

**Base Controls will deactivate all power to the radio remotes**

# CANBUS NODE CR2016

**Inside the trucks Cab box, and Turret Box is a CR2016. The CR2016 is a cabinet mounted Node. It has 16 Inputs and 16 Outputs.**

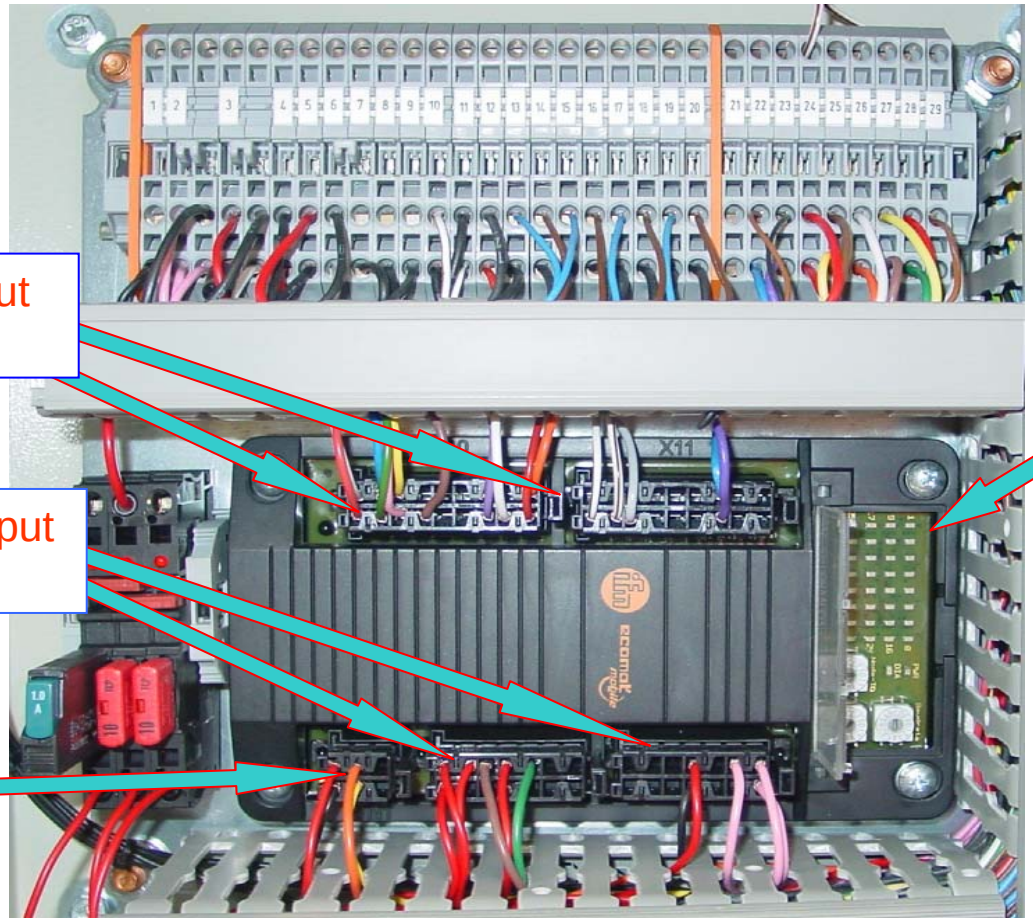


- **Inputs and outputs are wired to the push in terminals.**
- **The outputs can switch 2 Amp loads, and are overload protected. It has high temperature and vibration resistance.**

# CANBUS NODE CR2016

**The LED display indicates the status of each input and output.**

Input LEDs
1 -16

Output LEDs
17-32

**•The communications LED is green and flashes constantly when everything is working OK.**

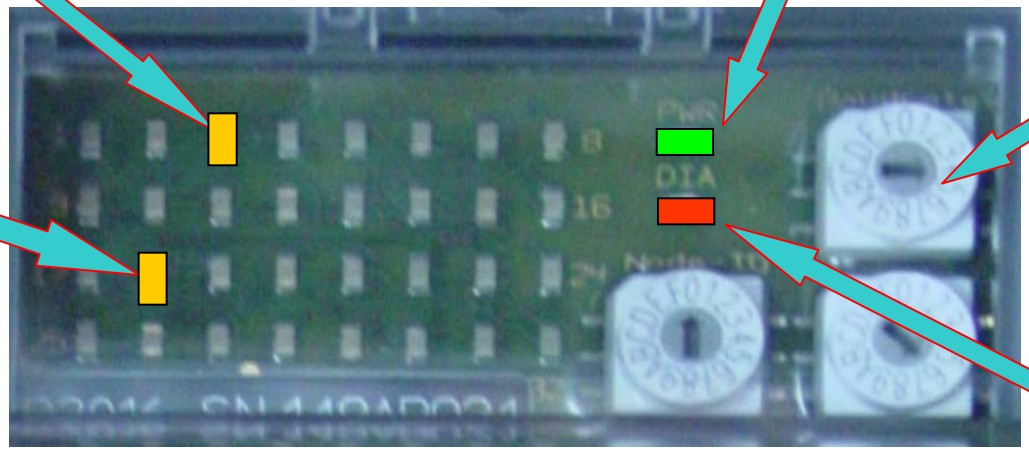


Node I.D. Dials

**•A Red LED indicates a communication error and the wiring will need to be checked for a disconnected node. The system will be shut down if the Red LED is on.**

**•To replace a node, remove plugs and swap the module. Set the dials with a screw driver to the same as the removed unit. No programming is required in the module.**

# STABS CONTROLS

**The Stabiliser leg controls are mounted at the rear of the truck. Each button goes to a Canbus node input. The function of the buttons is similar to previous trucks, and operator retraining is not required.**

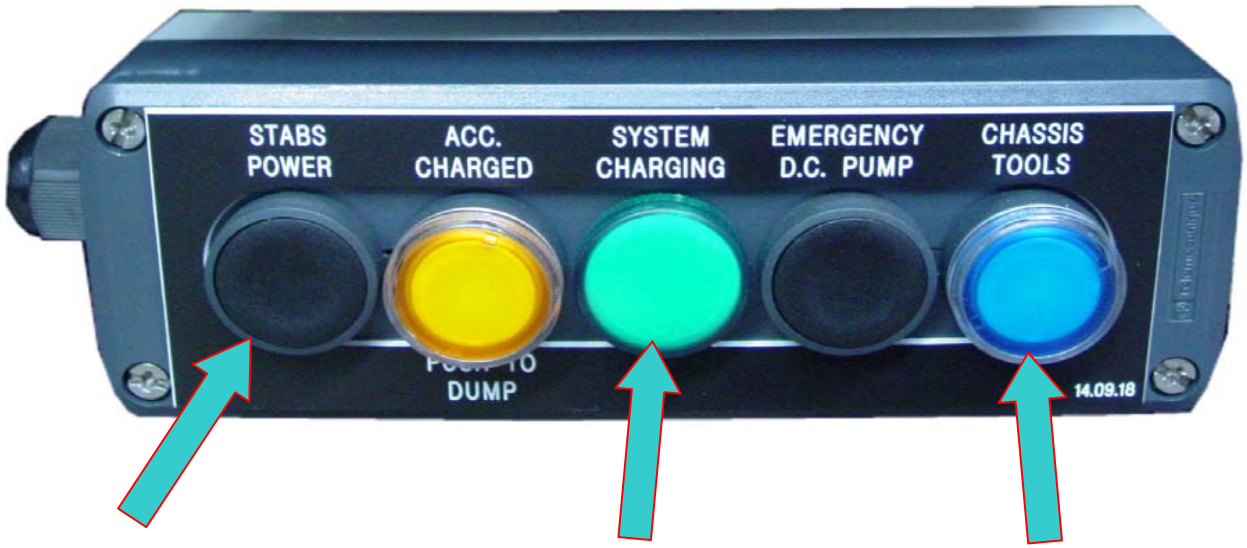


**If the Tower is not packed up the stab legs cannot be used. If the button is pushed this out of sequence error will be displayed in the cab.**

**The buttons are illuminated by the program logic in the Canbus screen.**

**Tools will be deactivated automatically by the Canbus screen when Emergency Stop is pushed.**

NIFTY-LIFT

ELEVATING
WORK PLATFORMS

www.nifty-lift.com.au

# Canbus Wired Trucks
## Frequently Asked Questions

**Q: What is Canbus?**

***A:*** Canbus is the name of a type of circuit wiring protocol combined with digital control hardware. In a traditionally wired circuit all of the switches and sensors are wired in series or via relays to create the circuit logic. In Canbus, the switches and sensors are directly wired to a computer node, which processes all of the logic.

**Q: Can Canbus affect the operation or safety of the EWP?**

***A:*** Canbus does not directly move any of the tower components. All of the tower functions are controlled directly by the radio remote signals hard wired to the Danfoss PVG hydraulic valve. Canbus can only turn on and off the hydraulic and electric oil supply. The safety of the EWP is no different to the traditional wiring circuit.

**Q: What are the benefits of canbus?**

***A:***

- Canbus provides the operator with an LCD screen in the cab indicating the status of the EWP at one centralised location. It will indicate why the tower is not functioning if one of the safety interlocks are not made.
- The screen provides diagnostic information to the operator on the status of every switch or sensor on the vehicle. These match LED indicator lights on the nodes indicating the switched state.
- It will provide alarms and warnings, if the tower or truck is outside of its normal operating conditions.
- The wiring is simplified with all switches and sensors screwed into their nodes, enabling easy replacement of parts by service personnel.
- Extra lights on the tower can be added by screwing the wires into existing nodes.
- The PTO is fully protected from damage via the program in the cab screen.

**Q: What re-training is required for EWP operators?**

***A:*** Operators must become familiar with the screen in the cab. The process of setting up, or packing up the EWP does not change.

**Q: How does the operator stow the tower and stabiliser legs in the event of a Canbus system failure?**

***A:*** An emergency rescue box can be supplied with each truck. It requires only 3 screw fittings to be twisted together along with battery clamps to fully stow the tower and stabiliser legs.

**Q: Will spare parts be affected?**

***A:*** All switches and sensors are the same as previously supplied. Canbus computer Node components should not require replacement, however Nifty-Lift maintains stock of spare parts.

**Q: Can the screen program be customised?**

***A:*** Yes, each truck has a custom designed program by Nifty-Lift. The programs can be updated by request if required. A memory card and adaptor can be sent in the mail, plugged into slots in the side of the screen and the program replaced.

***Q:*** **Will the system withstand the environment?**

***A:*** The canbus system is designed specifically for Mobile vehicle use, and is used extensively throughout Europe and the U.S.A on many similar applications. It has high vibration ratings, can cope with a temperature of 85 Deg C, and has a dirt and water ingress rating of IP67 (it can be high pressure washed for short periods), and includes metal housings for robust physical protection.

# System Components & Circuit Diagrams

## TABLE OF CONTENTS

**Subject**

HYDRAULIC CIRCUITS
ELECTRICAL CIRCUITS

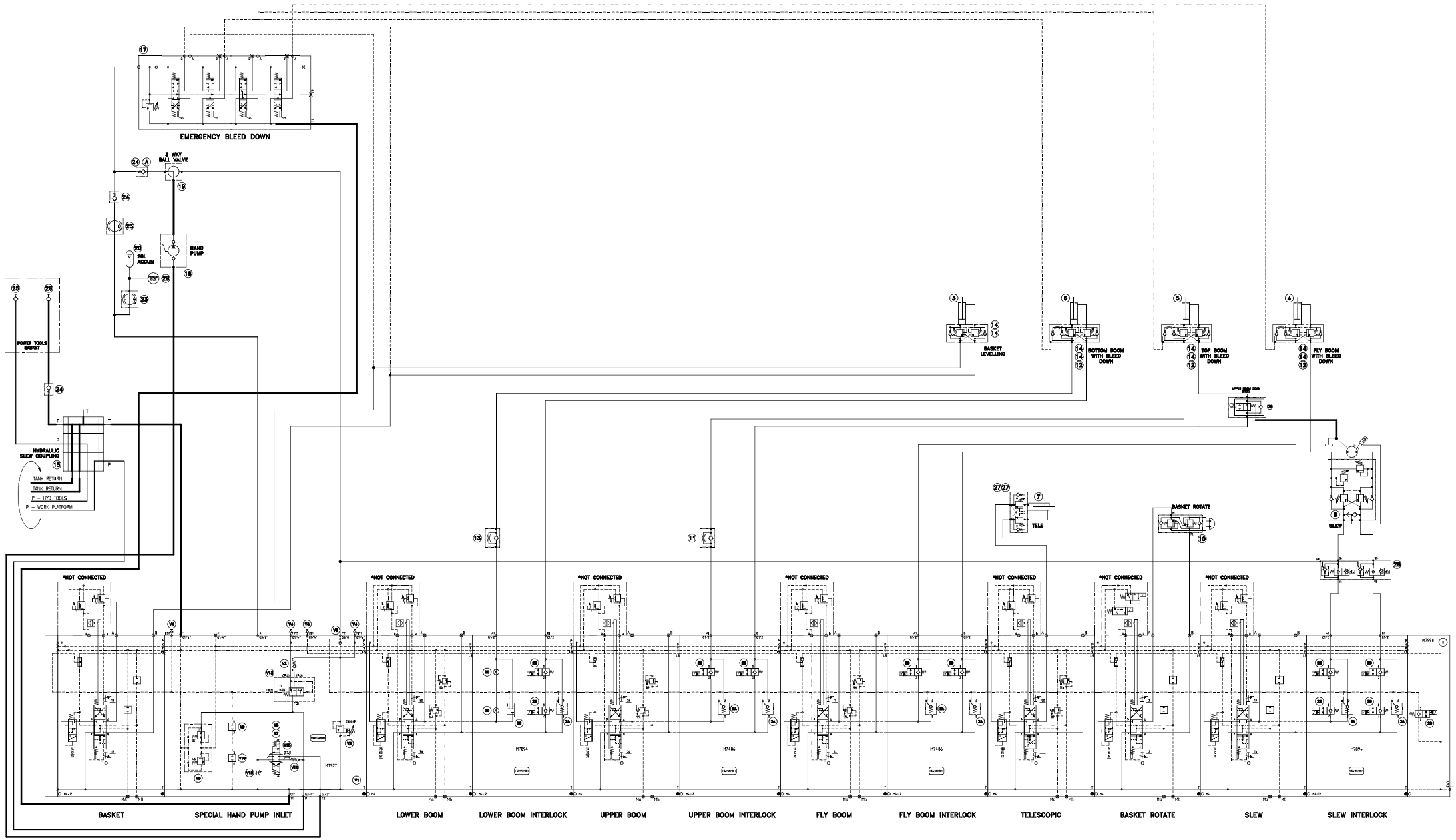


HYDRAULIC CIRCUIT
TOWER (ABOVE SLEW RING)

NL240KTFHV CC RR BOOM SHERRIN 43955
12.43955-1

# TOWER HYDRAULIC PARTS

| ITEM | PART NO: | DESCRIPTION | QTY |
|---|---|---|---|
| 1 | MDB4029 | VALVE REXROTH M4-12 CC RR PRIORITY VALVE SPOOL MONITORING | 1 |
| V1 | M7527S-NIFTY_LIFT | REXROTH INLET MANIFOLD | 1 |
| V2 | VUCN-12A/043128005705 | CHECK VALVE 12-2 CAVITY 1-2 BAR CRACK | 1 |
| V3 | VRC4 | CARTRIDGE CHECK VALVE 3/8" BSPP INSERT | 1 |
| V4 | RTP16-20 | COUPLING-MINIMESS 16-20 | 4 |
| V5 | MHDBN22K2-3*/420VFC | RELIEF MAIN DBN22/M4-12+15 | 1 |
| V6 | R900641606 | REDUCER PST.PILOT CARTRIDGE MHDRDB04 | 1 |
| V7 | 4WE6E6*/EG24N9C4 | VALVE-SZ.6 SOLENOID AMP.IP69 | 1 |
| V8 | M5X50 | BOLT KIT FOR 4W..6 | 1 |
| V9 | CP-08-2-20-N | PLUG-CAVITY | 1 |
| V10 | CP-10-2-20-N | PLUG-CAVITY | 1 |
| V11 | VUCN-08A/043120005600 | CARTRIDGE CHECK 8-2 CAVITY 1-2 BAR CRACK | 1 |
| V12 | KK8-2/NFCV-08-N-K-0 | CARTRIDGE NEEDLE FLOW CONTROL + SHUT OFF VALVE | 1 |
| V13 | VRLA-16A-22-S/048409002722 | PRIORITY VALVE | 1 |
| V15 | 158547 | ORIFICE 2.0mm FOR 06 VALVES | 1 |
| 2A | VSON-A/043306105600 | CARTRIDGE CHECK VALVE 8-3S CAVITY PILOT OPERATED | 6 |
| 2B | OD1505363ASOOCJT | CARTRIDGE 10-2 SOLENOID POPPET NC | 6 |
| 2C | CPLG-08-N-30-000 | PLUG-CAVITY | 1 |
| 2D | AV-14 | 7/8" UNO PLUG | 2 |
| 3 | 10.99.34 (VICTOR 19469) | CYLINDER 3.5" BORE 120/430 310 STROKE FEMALE TRUNNION | 1 |
| 4 | 10.99.25 (VICTOR 19232) | CYLINDER 5.0" BORE 798/1263 465 STROKE | 1 |
| 5 | 10.99.29 (VICTOR 19186A) | CYLINDER 7.0" BORE 1740/3092 1352 STROKE | 1 |
| 6 | 10.99.39 | CYLINDER 7.5" BORE 1300/316 456 STROKE | 1 |
| 7 | 10.99.26 (VICTOR 19153A) | CYLINDER 4.0" BORE 2674/4974 2300 STROKE MALE CLEVIS | 1 |
| 7A | 10.99.31 (VICTOR 19200A) | CYLINDER 4.0" BORE 2674/4974 2300 STROKE FEMALE CLEVIS | 1 |
| 9 | RE512TSMD-AU53A | PLANETARY GEARBOX ASSEMBLY RE512 WITH RE502M10Z15ZU3 PINION | 1 |
| 10 | 27970 | L20-15M-FT-180-S1-C-H HELAC ROTARY ACTUATOR | 1 |
| 11 | 681055 | INLINE CHECK VALVE WITH 1.5mm RESTRICTOR ORIFACE | 1 |
| 12 | CKBD-XEN | CRTRDG VLV PILOT TO OPEN CHECK (SUN ALT. TO DAA040) | 3 |
| 13 | 681056 | INLINE CHECK VALVE WITH 1.7mm RESTRICTOR ORIFACE | 1 |
| 14 | CACA-LHN | CRTRDG VLV COUNTERBALANCE VENTED 60 l/m 210 BAR | 8 |
| 15 | 12.10.07 | ASSY HYDRAULIC SLEW COUPLING 3 RING UNO 4.0" | 1 |
| 17 | BM20/3GUMOD1D1D1D1 | MONO BLOCK DIRECTION CONTROL VALVE MOTOR SPOOL 4 BANK | 1 |
| 18 | PM20 | HAND PUMP 10cc TANKLESS | 1 |
| 19 | BK3-38-L | 3/8" BALL VALVE 3 WAY | 1 |
| 20 | OFC130 | ACCUMULATOR 20L 345 BAR + ACCESSORIES + PRECHARGE 120 BAR | 1 |
| 23 | RL20-0606 | BALL VALVE | 3 |
| 24 | K4.1123 | CHECK VALVE IN LINE 0.5 BAR LEAK TIGHT | 2 |
| 25 | FIRG12BSPM | QUICK RELEASE COUPLING FLUSH FACE 1/2" BSP MALE | 1 |
| 25 | R110-06M | QUICK RELEASE COUPLING FLUSH FACE 3/8" BSP MALE | 1 |
| 26 | FIRG12BSPF | QUICK RELEASE COUPLING FLUSH FACE 1/2" BSP FEMALE | 1 |
| 26 | R110-06F | QUICK RELEASE COUPLING FLUSH FACE 3/8" BSP FEMALE | 1 |
| 27 | CACG-LGN | CRTRDG VLV COUNTERBALANCE VENTED 60 l/m 280 BAR | 2 |
| 28 | 688619 | PILOT BYPASS SLEW INTERLOCK BLOCK | 1 |
| 29 | 687924 (227924) | VALVE DECELERATION CAM OPERATED | 1 |

HYDRAULIC CIRCUIT
(BELOW SLEW RING)

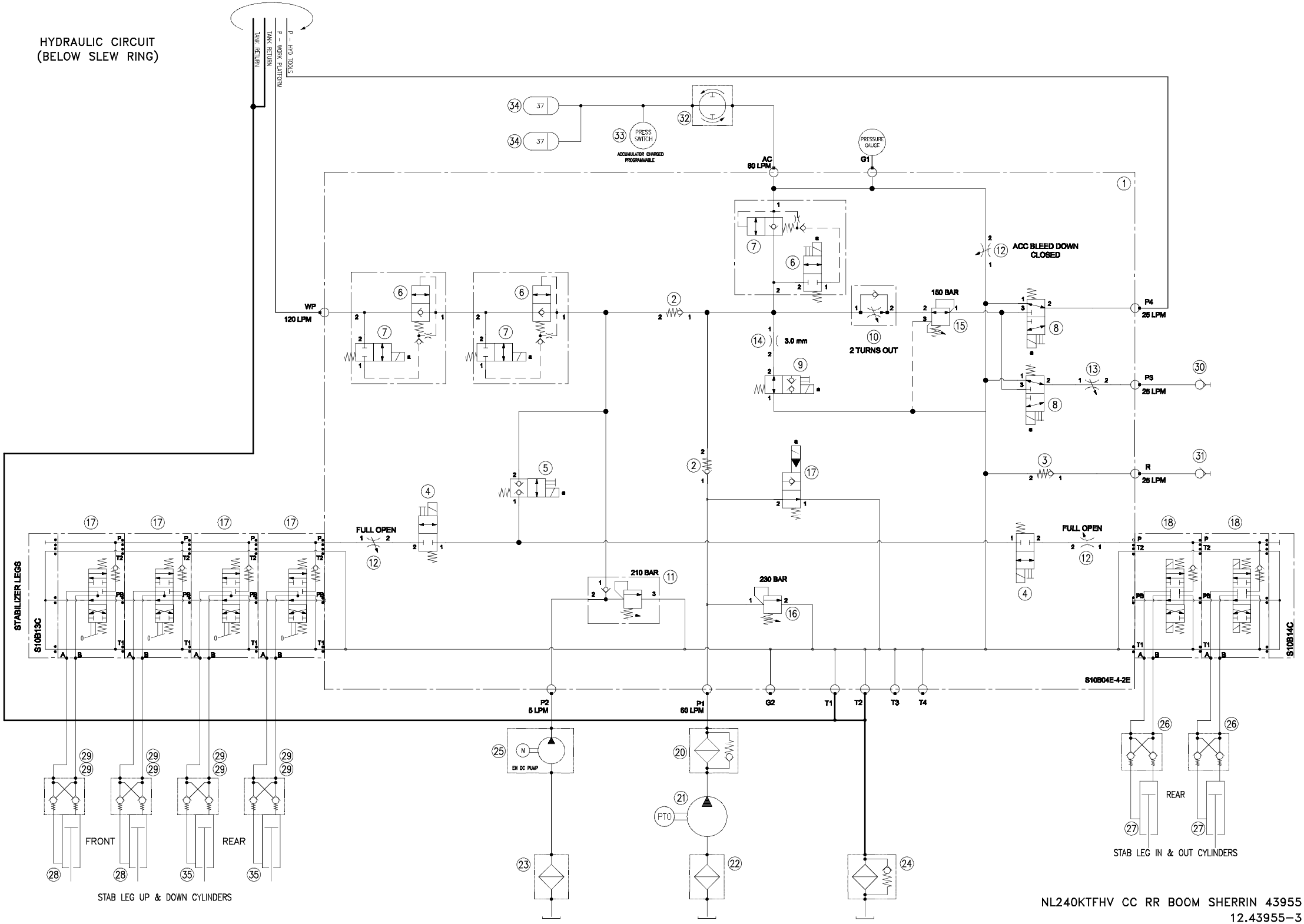


NL240KTFHV CC RR BOOM SHERRIN 43955
12.43955-3

# CHASSIS HYDRAULIC PARTS

| ITEM | PART NO: | DESCRIPTION | QTY |
|---|---|---|---|
| 1 | INT-CC-60L-4-2E (S10B04E) | CUSTOM FLUID POWER MANIFOLD INTERLOCK/TOOLS 60L CLOSED CCT | 1 |
| 2 | CXFA XAN | 1 TO 2 FREE FLOW CHECK VALVE | 2 |
| 3 | CXDA XAN | 1 TO 2 FREE FLOW CHECK VALVE | 1 |
| 4 | DLDA MCN | 2/2 WAY NC SOLENOID OPERATED DIRECTION CONTROL VALVE | 2 |
| 5 | DTDA MCN | 2/2 WAY NC SOLENOID OPERATED DIRECTION CONTROL VALVE | 1 |
| 6 | DFDA 8DN | 2W DIRECTIONAL POPPET VALVE WITH T8A CONTROL CAVITY | 3 |
| 7 | DAAL MCN | 2/2 WAY NC SOLENOID OPERATED DIRECTION CONTROL VALVE | 3 |
| 8 | DMDA MAN | 2/3 WAY SOLENOID OPERATED DIRECTION CONTROL VALVE | 2 |
| 9 | DTDA MHN | 2/2 WAY NO SOLENOID OPERATED DIRECTION CONTROL VALVE | 1 |
| 10 | FDCB LAN | FLOW CONTROL VALVE WITH REVERSE FLOW CHECK | 1 |
| 11 | HRDA LWN | DIRECT ACTING PRESSURE RELIEF VALVE WITH BEFORE CHECK | 1 |
| 12 | NFBC LCN | FULLY ADJUSTABLE NEEDLE VALVE | 3 |
| 13 | NFCC KCN | NEEDLE VALVE | 1 |
| 14 | M8X8 | M8 GRUBSCREW ORIFICE 3mm | 1 |
| 15 | PRDB LAN | DIRECTIONAL ACTING REDUCER/RELIEVER VALVE | 1 |
| 16 | RDDA LWN | DIRECTIONAL ACTING RELIEF VALVE | 1 |
| 17 | SV12-21-0-N-24DG | SOLENOID OPERATED DIRECTION CONTROL VALVE | 1 |
| 18 | C35E-A3L | MANUALLY OPERATED DIRECTIONAL VALVE | 4 |
| 19 | C35E-A3E-24DC | SOLENOID OPERATED DIRECTIONAL VALVE | 2 |
| 20 | PI4215-12CMX10 | HIGH PRESSURE FILTER 400 BAR | 1 |
| 21 | PTO-TRUCK/POWS90 | PTO TO SUIT TRUCK WITH 90cc PUMP | 1 |
| 22 | SF112A-GO | SUCTION STRAINER 1.5" 95 l/m | 1 |
| 23 | SF100-GO | SUCTION STRAINER 1.0" 50 l/m | 1 |
| 24 | OMTI-10-ANR | SPIN ON CAN RETURN FILTER (ELEMENT CS10-AN) | 1 |
| 25 | MP08-24V | BARNES MOTOR PUMP SET 2.11cc 24V NO RELIEF | 1 |
| 26 | 680225 (226225) | VALVE BLOCK DOUBLE PILOT CHECK (CV08-20-0-N-4) | 2 |
| 27 | 10.64.24 (EF 20 12 0508) | CYLINDER 2.5" BORE 1530/2749 1219 STROKE AG EZY-FIT | 2 |
| *27 | 10.64.24 (001-250-48-0000) | CYLINDER 2.5" BORE 1530/2749 1219 STROKE AG LYCO | 2 |
| 28 | 10.89.12 (EF4874) | CYLINDER 3.5" BORE 995/1745 1000 STROKE | 2 |
| 29 | CKBD-XEN | CRTRDG VLV PILOT TO OPEN CHECK (SUN ALT. TO DAA040) | 8 |
| 30 | FIRG12BSPM | QUICK RELEASE COUPLING FLUSH FACE 1/2" BSP MALE | 1 |
| 30 | R110-06M | QUICK RELEASE COUPLING FLUSH FACE 3/8" BSP MALE | 1 |
| 31 | FIRG12BSPF | QUICK RELEASE COUPLING FLUSH FACE 1/2" BSP FEMALE | 1 |
| 31 | R110-06F | QUICK RELEASE COUPLING FLUSH FACE 3/8" BSP FEMALE | 1 |
| 32 | RL20-0606 | BSPPFF BALL VALVE | 1 |
| 33 | PP7021 | IFM PROGRAMMABLE ELECTRIC PRESSURE SWITCH | 1 |
| 34 | OFC043 | ACCUMULATOR 37L 345 BAR + ACCESSORIES + PRECHARGE 63 BAR | 2 |
| 35 | 10.99.40 (EF6916) | CYLINDER 4.0" BORE 1270/2270 1000 STROKE | 2 |

*OPTIONAL

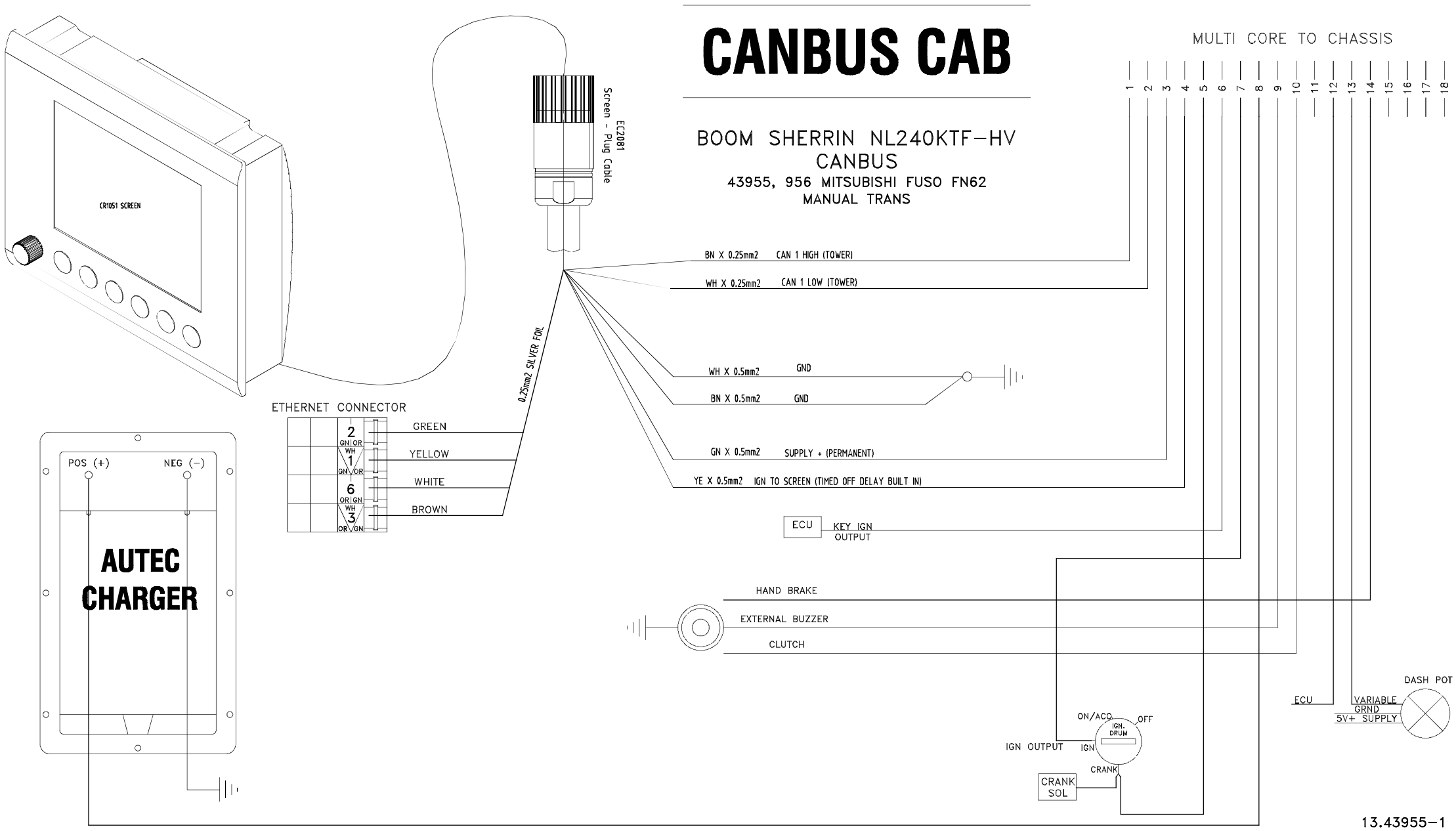
CANBUS CAB
BOOM SHERRIN NL240KTF-HV
CANBUS
43955, 956 MITSUBISHI FUSO FN62
MANUAL TRANS
MULTI CORE TO CHASSIS
1
2
3
4
5
6
7
8
9
10
11
12
13
14
15
16
17
18
CR1051 SCREEN
EC2081
Screen - Plug Cable
0.25mm2 SILVER FOIL
BN X 0.25mm2 CAN 1 HIGH (TOWER)
WH X 0.25mm2 CAN 1 LOW (TOWER)
WH X 0.5mm2 GND
BN X 0.5mm2 GND
GN X 0.5mm2 SUPPLY + (PERMANENT)
YE X 0.5mm2 IGN TO SCREEN (TIMED OFF DELAY BUILT IN)
ECU
KEY IGN
OUTPUT
ETHERNET CONNECTOR
2
GN OR
WH
1
GN OR
6
OR GN
WH
3
OR GN
GREEN
YELLOW
WHITE
BROWN
POS (+)
NEG (-)
AUTEC
CHARGER
HAND BRAKE
EXTERNAL BUZZER
CLUTCH
ON/ACC
OFF
IGN.
DRUM
IGN OUTPUT
IGN
CRANK
CRANK
SOL
DASH POT
ECU
VARIABLE
GRND
5V+ SUPPLY
13.43955-1

# CANBUS BATTERY BOX

BOOM SHERRIN NL240KTF-HV
CANBUS
43955, 956 MITSUBISHI FUSO FN62
MANUAL TRANS

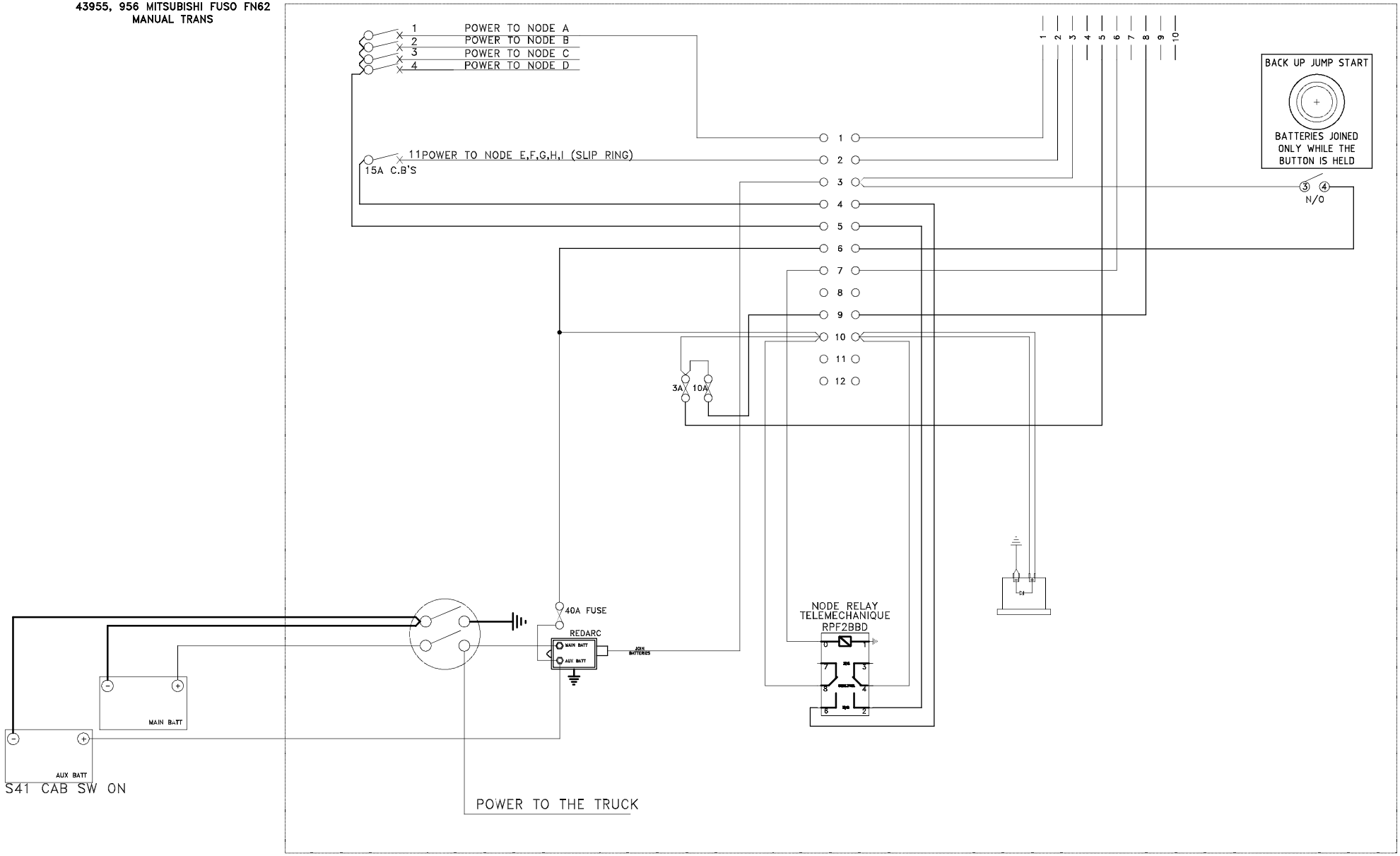

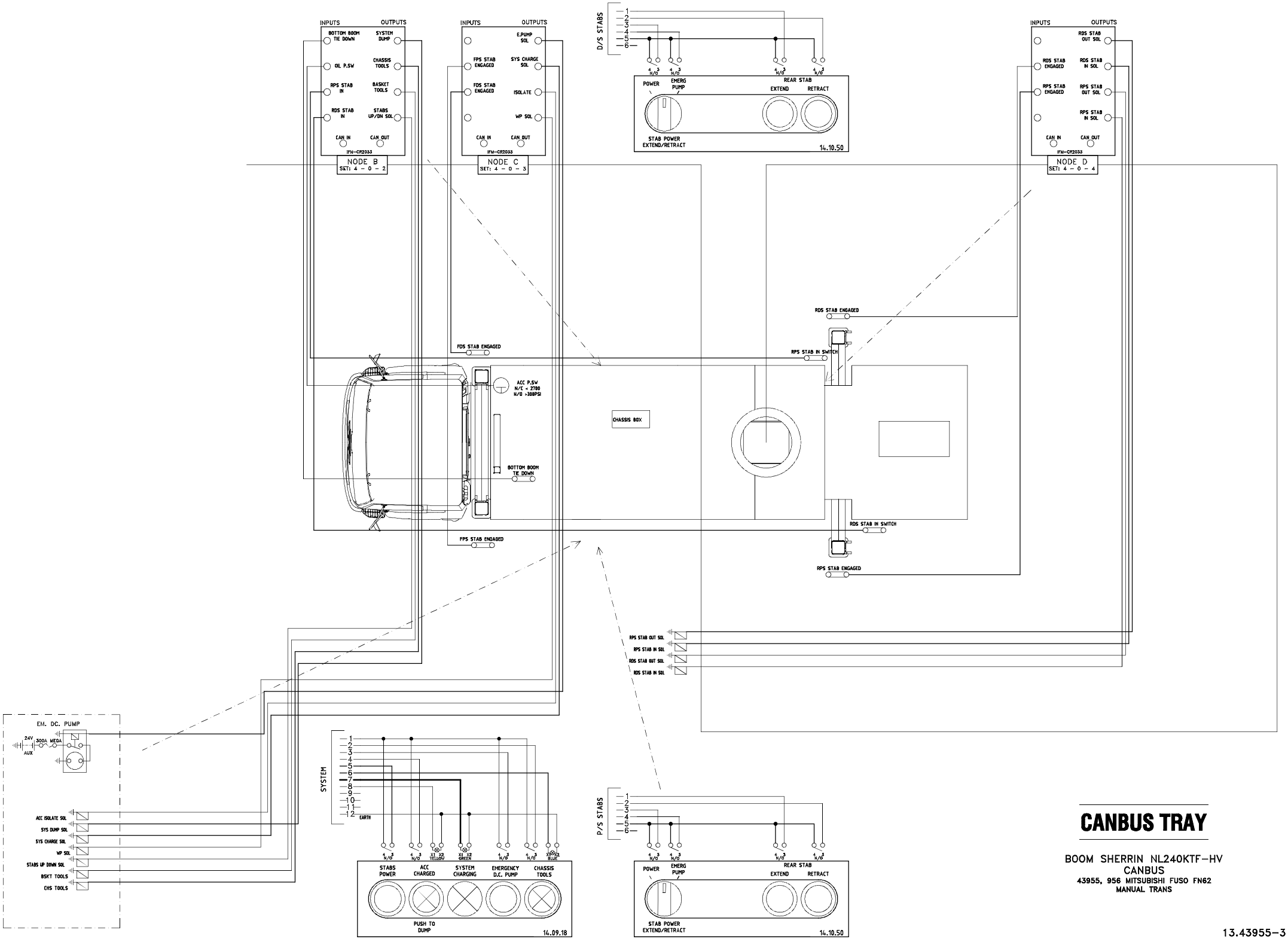


# CANBUS TRAY

BOOM SHERRIN NL240KTF-HV
CANBUS
43955, 956 MITSUBISHI FUSO FN62
MANUAL TRANS

13.43955-3

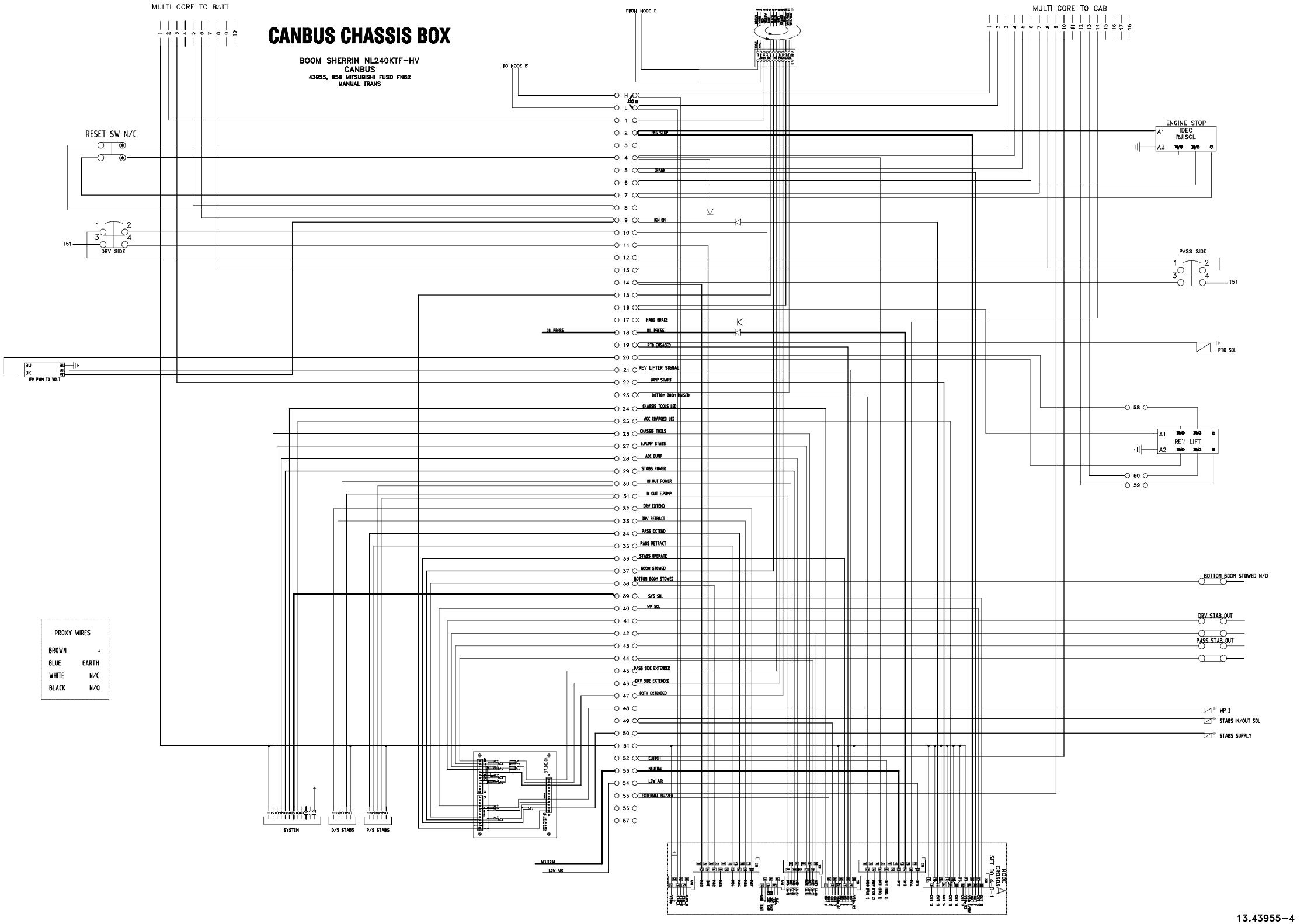
MULTI CORE TO BATT
CANBUS CHASSIS BOX
BOOM SHERRIN NL240KTF-HV
CANBUS
43955, 956 MITSUBISHI FUSO FN62
MANUAL TRANS
FRON NODE E
TO NODE B
MULTI CORE TO CAB
RESET SW N/C
DRV SIDE
T51
PASS SIDE
ENGINE STOP
IDEC
RJ1SCL
A1
A2
N/O
N/C
C
ENG STOP
CRANK
IGN ON
HAND BRAKE
OIL PRESS
PTO ENGAGED
PTO SOL
REV LIFTER SIGNAL
JUMP START
BOTTOM BOOM RAISED
CHASSIS TOOLS LED
ACC CHARGED LED
CHASSIS TOOLS
E.PUMP STABS
ACC DUMP
STABS POWER
IN OUT POWER
IN OUT E.PUMP
DRV EXTEND
DRV RETRACT
PASS EXTEND
PASS RETRACT
STABS OPERATE
BOOM STOWED
BOTTOM BOOM STOWED
BOTTOM BOOM STOWED N/O
SYS SOL
WP SOL
DRV STAB OUT
PASS STAB OUT
PASS SIDE EXTENDED
DRV SIDE EXTENDED
BOTH EXTENDED
WP 2
STABS IN/OUT SOL
STABS SUPPLY
CLUTCH
NEUTRAL
LOW AIR
EXTERNAL BUZZER
IPM PWM TO VOLT
BU
BK
PROXY WIRES
BROWN +
BLUE EARTH
WHITE N/C
BLACK N/O
SYSTEM
D/S STABS
P/S STABS
NODE A
SET TO 4-CF-1
13.43955-4

# CANBUS TURRET BOX

BOOM SHERRIN NL240KTF-HV
CANBUS
43850, 95R MITSUBISHI FUSO FH62
MANUAL TRANS

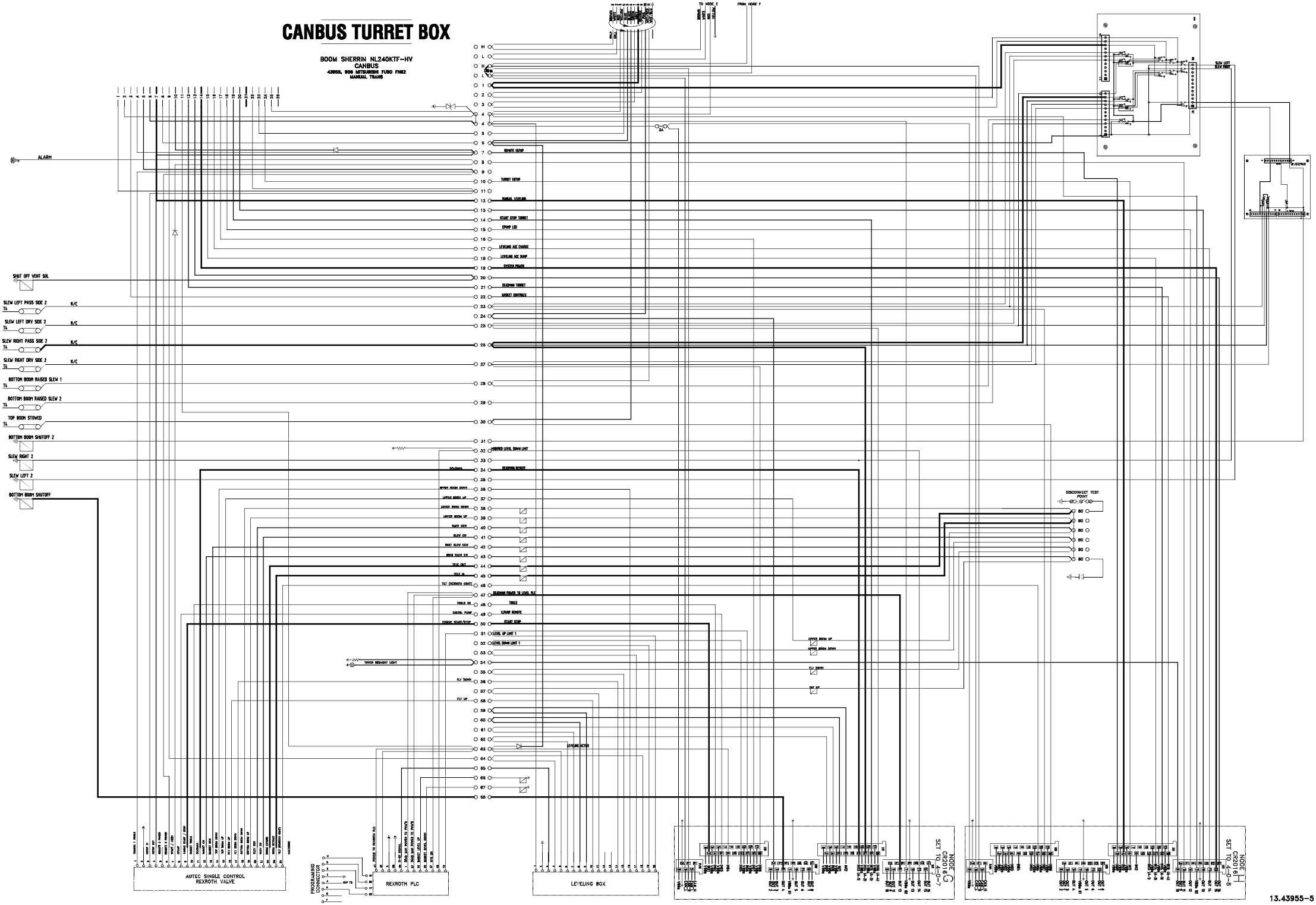


13.43955-5

# CANBUS BASE

BOOM SHERRIN NL240KTF–HV
CANBUS
43955, 956 MITSUBISHI FUSO FN62
MANUAL TRANS

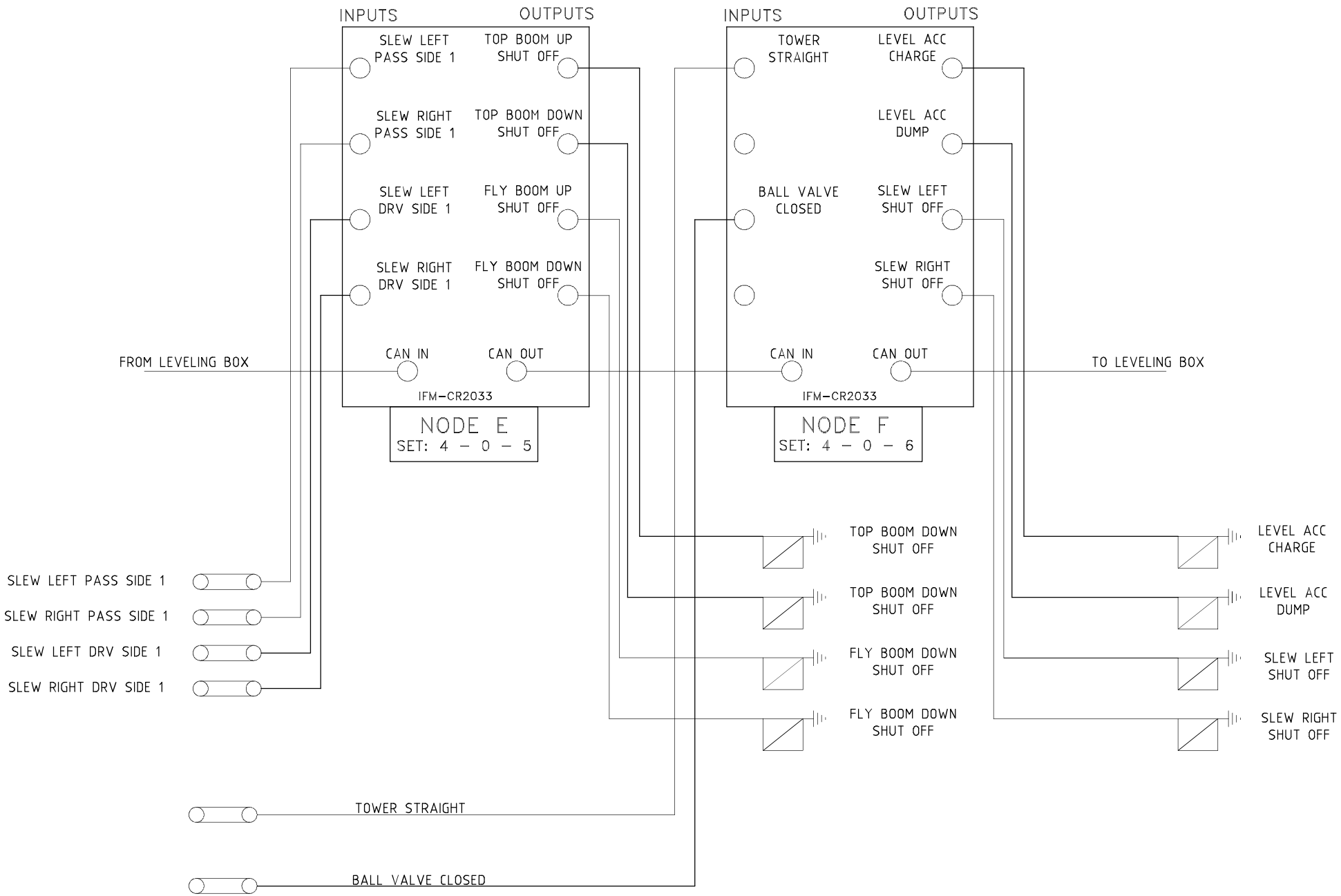

# CANBUS CONTROLS BOX

BOOM SHERRIN NL240KTF-HV
CANBUS
43955, 956 MITSUBISHI FUSO FN62
MANUAL TRANS

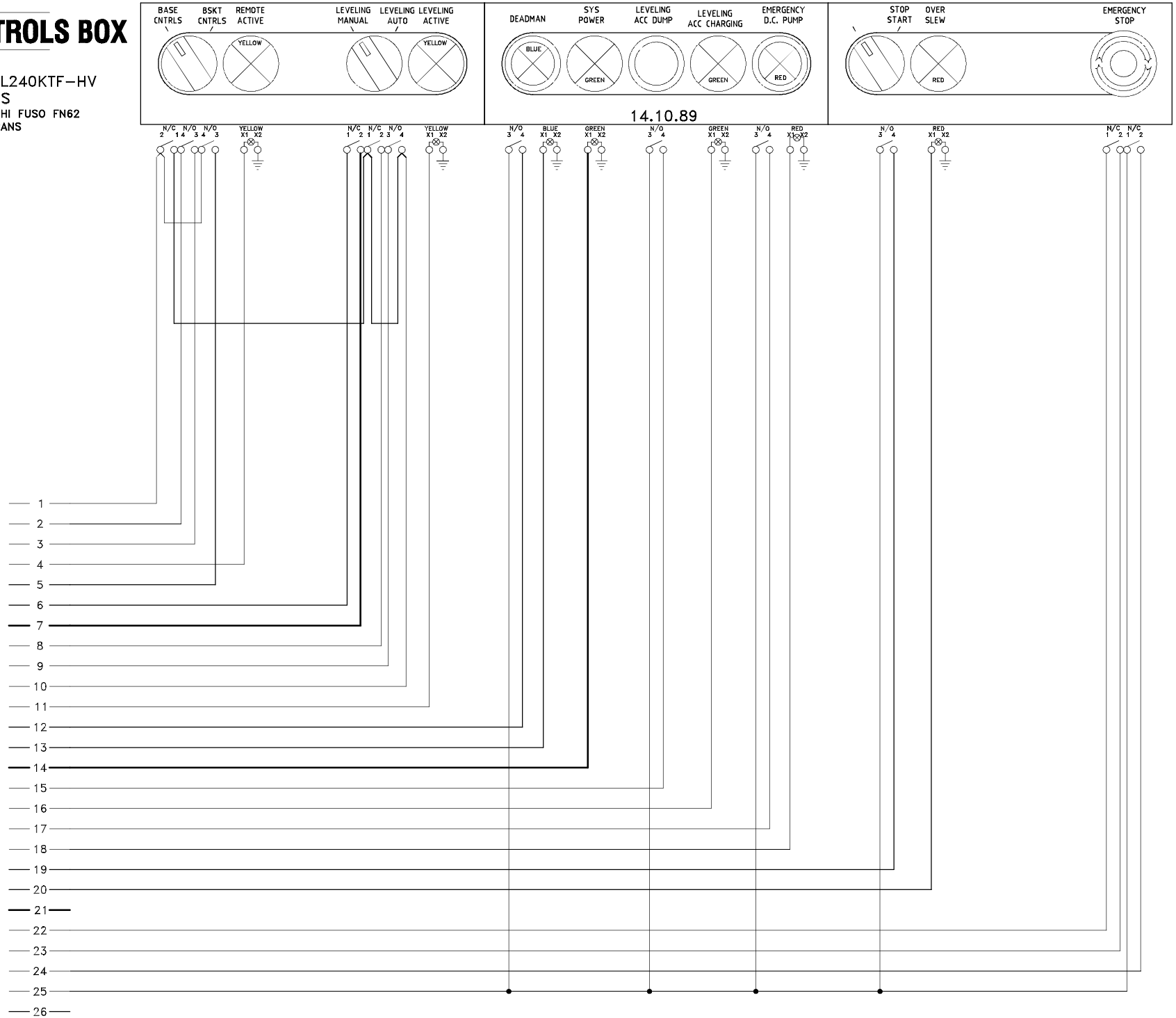

# LEVELING CHARGE BOX NTC-02

DECAL NO: 14.11.93

KTF HYDRO-ELECTRIC
AUTO LEVELLING SYSTEM

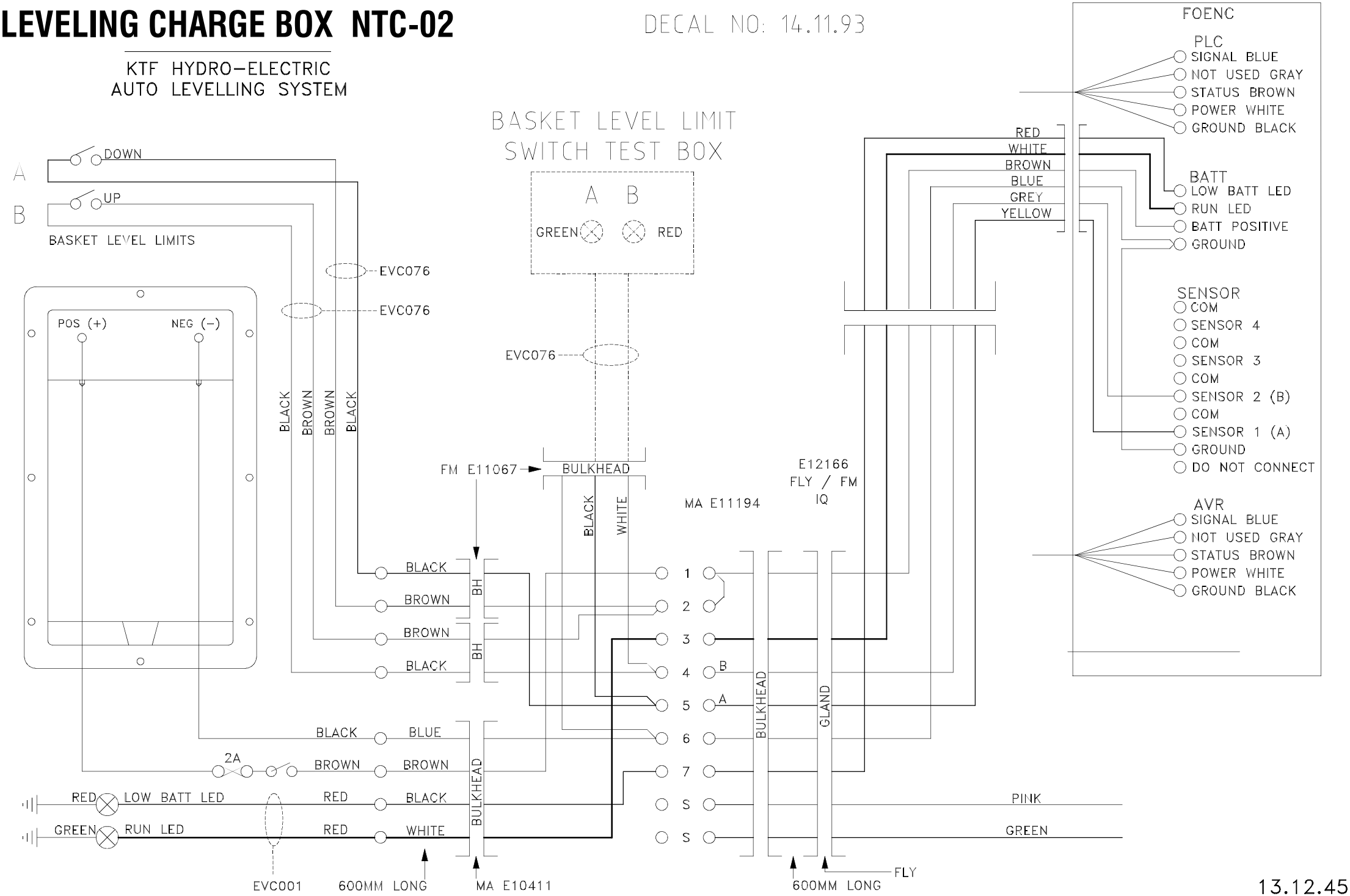


13.12.45

# Chapter 4

| Maintenance | 4 |
|---|---|

## TABLE OF CONTENTS

**Subject** **Page**

DAILY CHECKLIST ..... ….3
SERVICE AND MAINTENANCE SCHEDULE…….4
FASTENER SPECIFICATION AND TORQUE SETTINGS…….5
LUBRICATION……... .6
CYLINDERS……..... .7
PINS…….....8
INSULATION……...9
INSULATION BAND & MARKINGS…… 10
SUPPLIER LITERATURE……... 11

**IMPORTANT !**

Operators must obey all manuals, safety instructions, and labelling as provided. Unsafe items must be reported immediately to their supervisors. Without prejudice, Nifty Lift cannot be held responsible for accidents, machine failures or faults. It is the total responsibility of the owner/client to fully instruct and supervise their operators and maintain a full, comprehensive service/maintenance program for each vehicle for which a minimum standard has been included in this technical manual. Nifty Lift's liability may be nullified if the machine is not maintained in accordance with the manufacturer's instructions, or where no specific instruction is given, in accordance with standard industry practice. Always use approved Nifty Lift spare parts.

**NOTE**

A proper maintenance program is important to ensure a safe and reliable working life from your Nifty Lift EWP.

This section contains information to assist in carrying out periodical maintenance tasks required by the operator, and for detailed servicing by qualified service personnel.

**WARNING**

**Prior to carrying out any repair work, disconnect the battery negative lead.**

**If any of the booms are elevated, securely support them prior to working under or around the booms.**

# DAILY CHECKLIST

Inspect and/or test the following daily or at the beginning of each shift.

**Check:**

- Check all fluid levels.
- Clear the tray of all debris. Boom must be clean inside and out, and dry.
- Signs of accidental or other damage that may render the unit unsafe to operate.
- Check transport tie downs are present and functional.
- Operating and emergency controls: Check that all controls and emergency stops are in working order
- Check the operation of safety interlocks.
- Operate all controls to ensure their correct and proper function and response.
- Check the operation of the emergency DC pump.
- Harness attachment point and CDD's: Check that the D-ring harness attachment points and the CDD's are present and free from defects and that the bolts are tight.
- Hydraulic lines should be checked for binding, abrasion, wear and leaks.
- Cables and wiring harnesses.
- Loose or missing parts, damaged or missing covers.
- The pressure filters indicator.
- Check safety notices and decals for legibility.
- All critical welds.
- Hydraulic reservoir level: Check the level of the hydraulic fluid in the reservoir with the boom stowed, stabiliser legs retracted and the accumulator discharged.
- Ensure radio remotes are fully charged and in good working order.

# **Nifty-Lift** Elevated Work Platforms Service/Maintenance Schedule

*To be completed at 3 month intervals*

**Customer:**

**Date of Service:**

**Model:**

**Serial Number:**

**Service Type:** 3 month, 6 month, 9 month, 12 month (Circle)

| **Description** | **Every 3 months** | **At 6 months** | **At 12 months** | **Checked** √ |
|---|---|---|---|---|
| **CRITICAL BOLTS AND INSPECTION** | | | | |
| | | | | |
| Check and tighten all critical fasteners | × | × | × | |
| Check all roll pins are present and located correctly | × | × | × | |
| Check mesh of slew ring and pinion gear | | × | × | |
| Check wear deflection on slew ring | | | × | |
| Check all cylinders and rods for signs of leakage or damage | × | × | × | |
| Inspect levelling system for signs of wear or damage Check level rod lock nuts | | × | × | |
| Check guardrails/sideboards and floors for damage | × | × | × | |
| Inspect critical welds at base and frame for signs of cracks - damage or distortion | × | × | × | |
| Check pins and bushes for wear | | × | × | |
| Check condition of insulation covers, booms and paintwork. Repair as required | × | × | × | |
| Check basket mount and bolts | | × | × | |
| Check and tighten PTO mounting bolts | × | × | × | |
| | | | | |
| **HYDRAULICS** | | | | |
| | | | | |
| Clean Hydraulic oil breather cap filter | × | × | × | |
| Check turret and booms for leaks | × | × | × | |
| Check and adjust Basket levelling holding valves | | | × | |
| Check all cylinder holding valves. Raise all booms up and away from rests. Without 'deadman' activated, operate bottom, top and fly (if fitted) booms independently. If boom lowers, check holding valves. | × | × | × | |
| Replace pressure filter (ref. lube chart) | | | × | |
| Replace return line filter (ref. lube chart) | | × | × | |
| Check daily hydraulic oil level (top up SHELL TELLUS 46 or equivalent) | × | × | × | |
| Replace hydraulic oil SHELL TELLUS 46 or equivalent | | | × | |
| Check tool lines and fittings for leaks and damage | | × | × | |
| Test accumulator & ROTATE 90 DEGREES (if fitted) | | × | | |
| Accumulator Inspection (Licensed Pressure Vessel Inspector) (if fitted) | Every 2 Years | | | |

| Description | Every 3 months | At 6 months | At 12 months | Checked |
|---|---|---|---|---|
| | | | | √ |
| **LUBRICATION** | | | | |
| | | | | |
| Grease Knuckle and top jib cylinder (points - ref. lube chart) | × | × | × | |
| Grease basket pivot and levelling cylinder (points - ref. lube chart) SHELL ALVANIA EP or equivalent | × | × | × | |
| Grease slew race (points - refer lube chart) SHELL ALVANIA EP or equivalent | × | × | × | |
| Grease hydraulic foot (1 point per leg) SHELL ALVANIA EP or equivalent | × | × | × | |
| Check slew box oil level and security | × | × | × | |
| Change slew box oil SHELL OMALA 220 or equivalent | After First 100 Hours | | × | |
| Inspect and lubricate levelling rod | × | × | × | |
| Check operation of all controls (base & basket) including deadman | × | × | × | |
| Anti Seize on pins of spring lockout and/or stabiliser legs as per lube chart- LOCTITE SILVER GRADE or equivalent (if fitted) | | | × | |
| | | | | |
| **OPERATIONAL, EMERGENCY AND SAFETY ITEMS** | | | | |
| | | | | |
| Operate machine from base, test all controls for correct operation through all positions | × | × | × | |
| Operate machine from basket, test all controls for correct operation through all positions | × | × | × | |
| Inspect level gauges and replace if damaged or missing | × | × | × | |
| Check all Emergency systems - emergency batteries and charging system, operation of electric pump and emergency controls | × | × | × | |
| Check for correct operation of spring lockouts and/or stabilser legs | × | × | × | |
| Inspect Controlled descent device for mounting, rope damage and length of rope | × | × | × | |
| Inspect basket/boom harness mounting points | × | × | × | |
| Check safety interlocks are operating on PTO, tower and legs | × | × | × | |
| Check safety alarm for brake interlock is operating (if fitted) | × | × | × | |
| Inspect all control labels & signage are legible | × | × | × | |
| Test emergency stops | × | × | × | |
| Check operation and record hour meter reading | × | × | × | |
| Check and inflate tyres to correct pressure | × | × | × | |
| Check basket tie down and basket rest | × | × | × | |
| Check attachment of PTO & Pump, engagement and indicator lamp, check for oil leaks | | × | × | |

| Description | Every 3 months | At 6 months | At 12 months | Checked |
|---|---|---|---|---|
| | | | | √ |
| Check springs, shackles and pins for signs of damage | | | × | |
| Check that fire extinguisher is fully charged (if fitted) | × | × | × | |
| Inspect all insulation markings on booms and reflective material (if fitted) | × | × | × | |
| Check hydraulic & electric slew couplings for leaks, damage or hose/wire damage | | × | × | |
| Check speed of all operations - see separate spec sheet | | | × | |
| Check directional arrows function correctly (if fitted) | × | × | × | |
| Check revolving lamps (if fitted) | × | × | × | |
| IMU Recalibration (KTF machines only - if fitted) | | × | | |
| Inspect surface leakage current test electrode | × | × | × | |
| Electrical test unit | | × | × | |
| Fill out operators Log Book | × | × | × | |
| Load Test Batteries, check water level and condition | × | × | × | |
| Slew gearbox brake test | | | × | |
| | | | | |
| | | | | |
| | | | | |

| Description | | | At 5 years | Checked |
|---|---|---|---|---|
| | | | | √ |
| Extension Drive Assembly Full inspection/Chain re-tension on DT, KDT,KST and RKT machines (requires the removal of extension drive from booms) | | | × | |

**COMMENTS:**

**FASTENER SPECIFICATIONS AND TORQUE SETTINGS**

| | *SLEW INNER RING (TO CHASSIS)* | | | | | | | *SLEW OUTER RING (TO TURRET)* | | | | | | |
|---|---|---|---|---|---|---|---|---|---|---|---|---|---|---|
| | BOLT | | | NUT | | WASHER | TORQUE | BOLT | | | NUT | | WASHER | TORQUE |
| **MODEL** | SIZE | LENGTH *(mm)* | TYPE | SIZE | TYPE | TYPE | *ft lb (Nm)* | SIZE | LENGTH *(mm)* | TYPE | SIZE | TYPE | TYPE | *ft lb (Nm)* |
| **NL70/100LVM<br>NL80DT<br>NL90DT<br>NL100LVM<br>NL105LVM<br>NL125KF** | M12 *(Grade 12.9)* | 35 | Unbrako | - | - | Hardened | 100 (135) | M16 *(Grade 10.9)* | 50 | Zinc | M16 *(Class 8)* | Nyloc | Hardened | 140 (190) |
| **NL100KST<br>NL110DT<br>NL120KDT<br>NL140RKT** | M12 *(Grade 12.9)* | 40 | Unbrako | - | - | Hardened | 100 (135) | M16 *(Grade 10.9)* | 55 | Zinc | M16 *(Class 10)* | Zinc<br>Loctite 277 | Hardened | 206 (280) |
| **NL145RKT** | M12 *(Grade 12.9)* | 40 | Unbrako | - | - | Hardened | 100 (135) | M12 *(Grade 10.9)* | 85 | Zinc | M12 *(Class 10)* | Zinc | Hardened | 86 (117) |
| **NL170RKT<br>NL180RKT** | M16 *(Grade 10.9)* | 110 | Zinc | M16 *(Class 10)* | Zinc<br>Loctite 277 | Hardened | 206 (280) | M16 *(Grade 10.9)* | 110 | Zinc | M16 *(Class 10)* | Zinc<br>Loctite 277 | Hardened | 206 (280) |
| **NL170KTF<br>NL190KTF<br>NL240KTF** | M16 *(Grade 10.9)* | 110 | Zinc | M16 *(Class 10)* | Zinc<br>Loctite 277 | Hardened | 206 (280) | M16 *(Grade 10.9)* | 110 | Zinc | M16 *(Class 10)* | Zinc<br>Loctite 277 | Hardened | 206 (280) |

| | *SLEW GEARBOX (TO TURRET)* | | | | | | | *SLEW GEARBOX (PINION)* | | | | | | |
|---|---|---|---|---|---|---|---|---|---|---|---|---|---|---|
| | BOLT | | | NUT | | WASHER | TORQUE | BOLT | | | NUT | | WASHER | TORQUE |
| **MODEL** | SIZE | LENGTH *(mm)* | TYPE | SIZE | TYPE | TYPE | *ft lb (Nm)* | SIZE | LENGTH *(mm)* | TYPE | SIZE | TYPE | TYPE | *ft lb (Nm)* |
| **NL70/100LVM<br>NL80DT<br>NL90DT<br>NL100LVM<br>NL105LVM<br>NL125KF** | M12 *(Grade 12.9)* | 50 | Unbrako | M12 *(Class 8)* | Nyloc | Hardened | 57 (78) | M12 *(Grade 8.8)* | 35 | Zinc | - | - | - | 63 (85) |
| **NL100KST<br>NL110DT<br>NL120KDT<br>NL140RKT** | M10 *(Grade 10.9)* | 35 | Zinc | - | - | Hardened | 49 (67) | M6 *(Grade 10.9)* | 20 | Black | - | - | - | 11 (15) |
| **NL145RKT** | M10 *(Grade 10.9)* | 35 | Zinc | - | - | Hardened | 49 (67) | M6 *(Grade 10.9)* | 20 | Black | - | - | - | 11 (15) |
| **NL170RKT<br>NL180RKT** | M12 *(Grade 10.9)* | 35 | Zinc | - | - | Hardened | 86 (117) | M10 *(Grade 10.9)* | 20 | Black | - | - | - | 52 (70) |
| **NL170KTF<br>NL190KTF<br>NL240KTF** | M12 *(Grade 10.9)* | 35 | Zinc | - | - | Hardened | 86 (117) | M10 *(Grade 10.9)* | 20 | Black | - | - | - | 52 (70) |

NIFTY-LIFT
ELEVATING
WORK PLATFORMS

# LUBRICATION

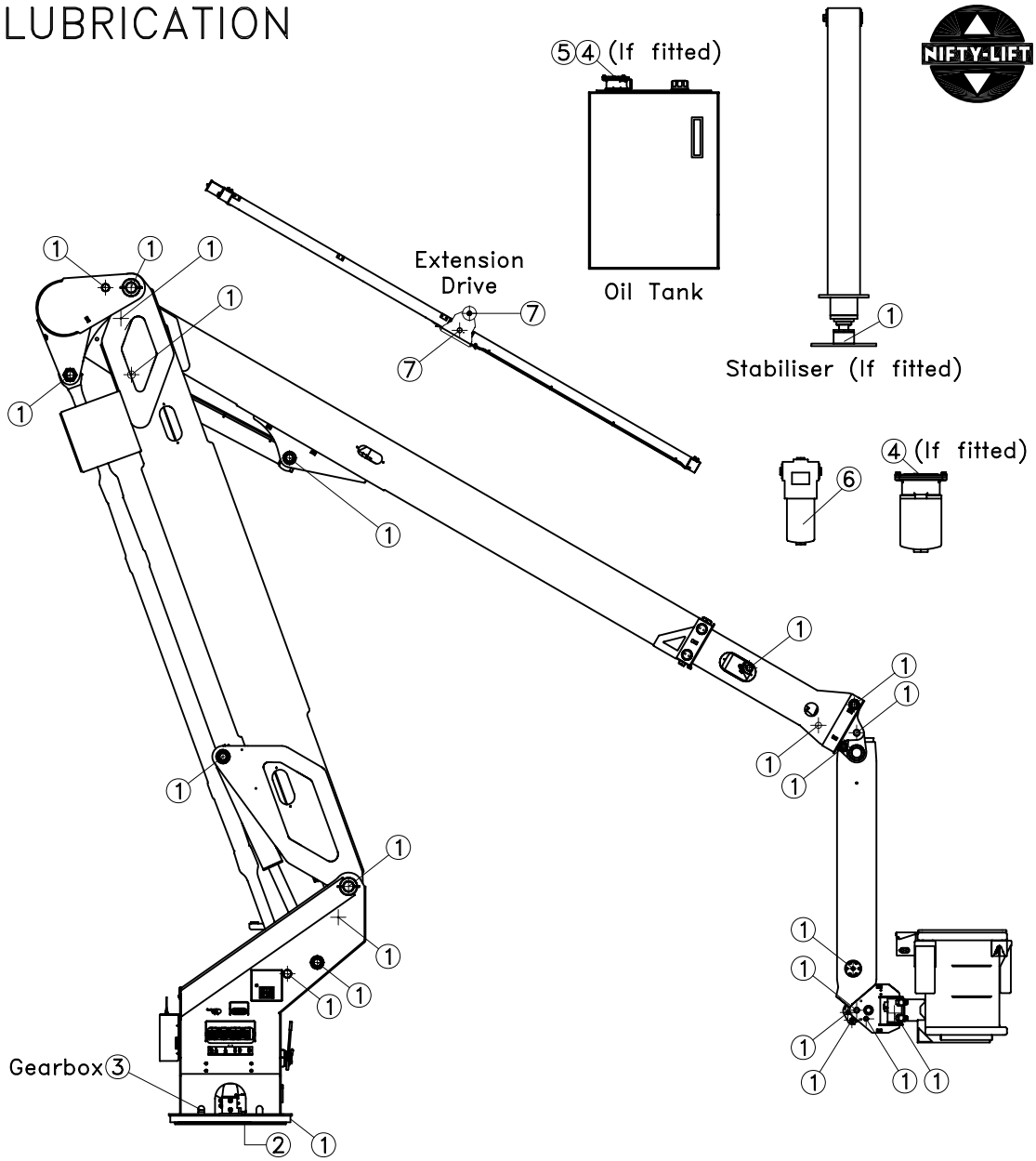


| | LUBRICANT | FREQUENCY |
|---|---|---|
| ① | Shell Alvania EP (LF2) | 3 MONTHLY – Bushes & slew race |
| ② | Optimol Viscogen 4 | 3 MONTHLY – Slew gear tooth |
| ③ | Shell Omala 220 | 12 MONTHLY – Gearbox |
| ④ | Return line filter OMTF100–GN (CR100–GN) (If fitted) | 6 MONTHLY |
| ④ | Return line filter OMTI–10–ANR (CS10–AN) (If fitted) | 6 MONTHLY |
| ⑤ | Shell Tellus 46 hydraulic oil – check daily, change | 12 MONTHLY |
| ⑥ | PI3115CMX10 Mahle high pressure filter element | 12 MONTHLY |
| ⑦ | Loctite Silver grade anti–seize | 12 MONTHLY |

CRITICAL WELDS NL240KTF

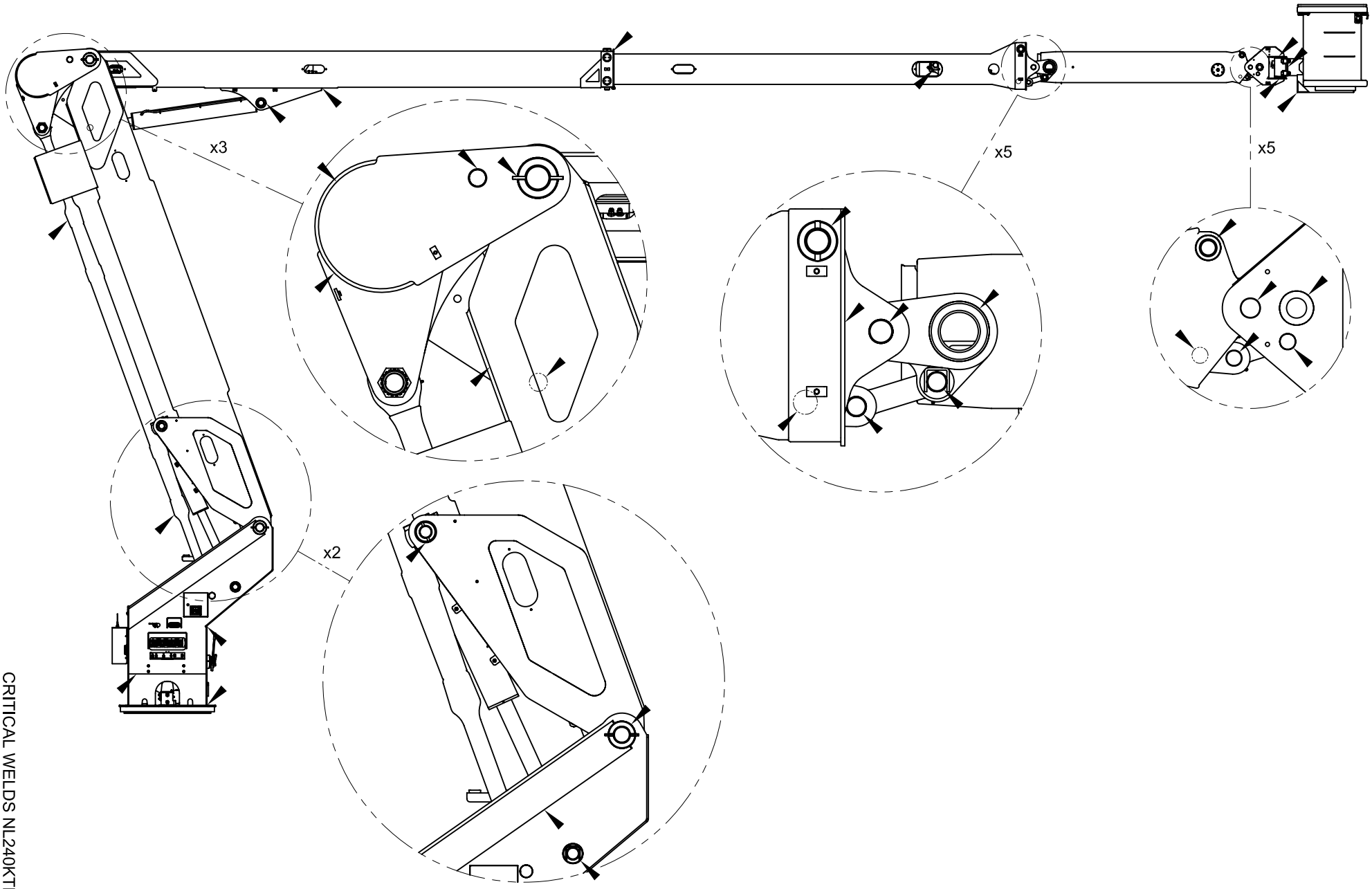


NIFTY-LIFT
ELEVATING
WORK PLATFORMS

CRITICAL WELDS NL240KTF

24.04.44

CRITICAL FASTENERS NL240KTF

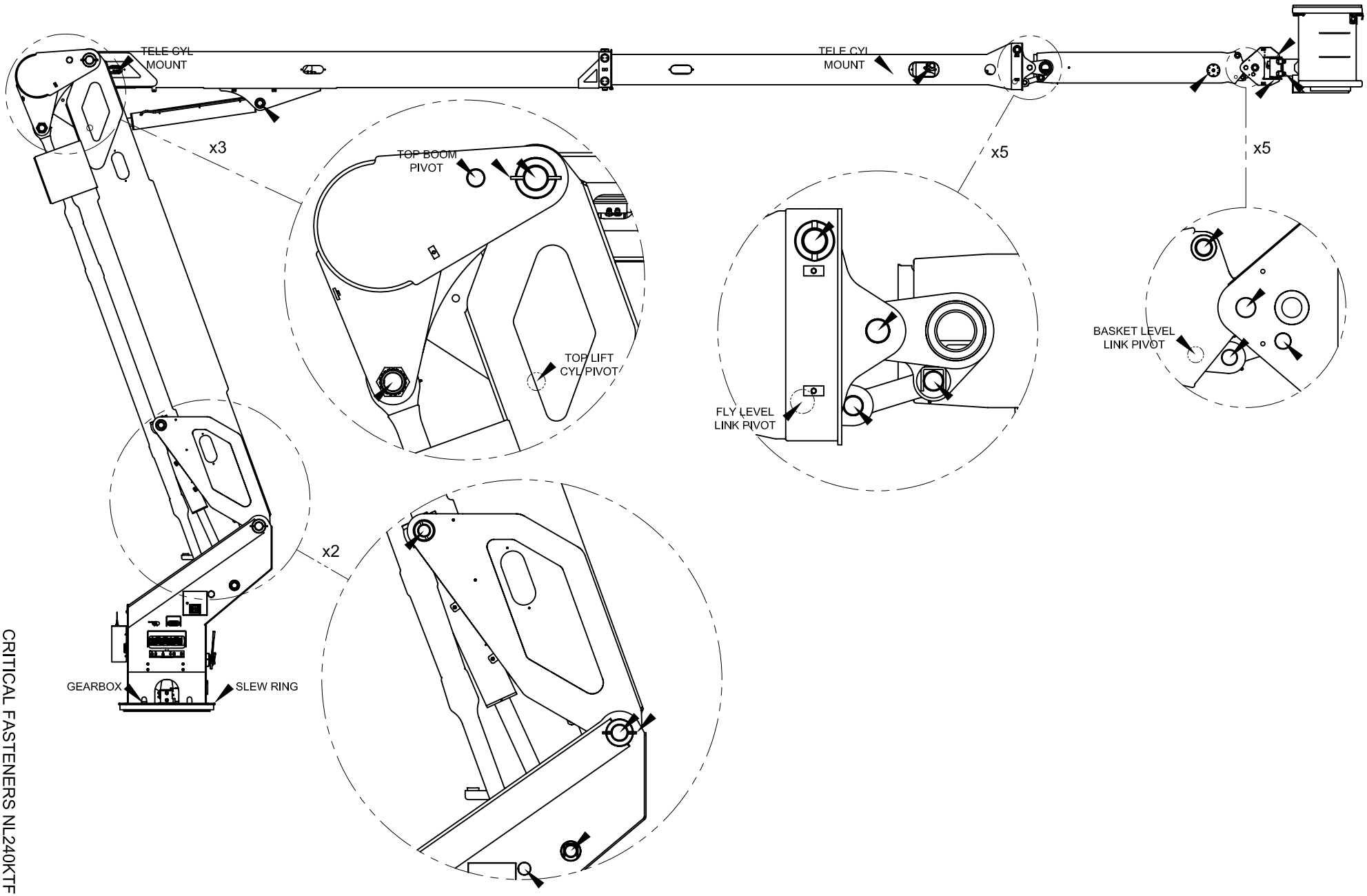


NIFTY-LIFT
ELEVATING
WORK PLATFORMS

CRITICAL FASTENERS NL240KTF

24.04.45

# NL240KTF-HV INSULATION BANDS

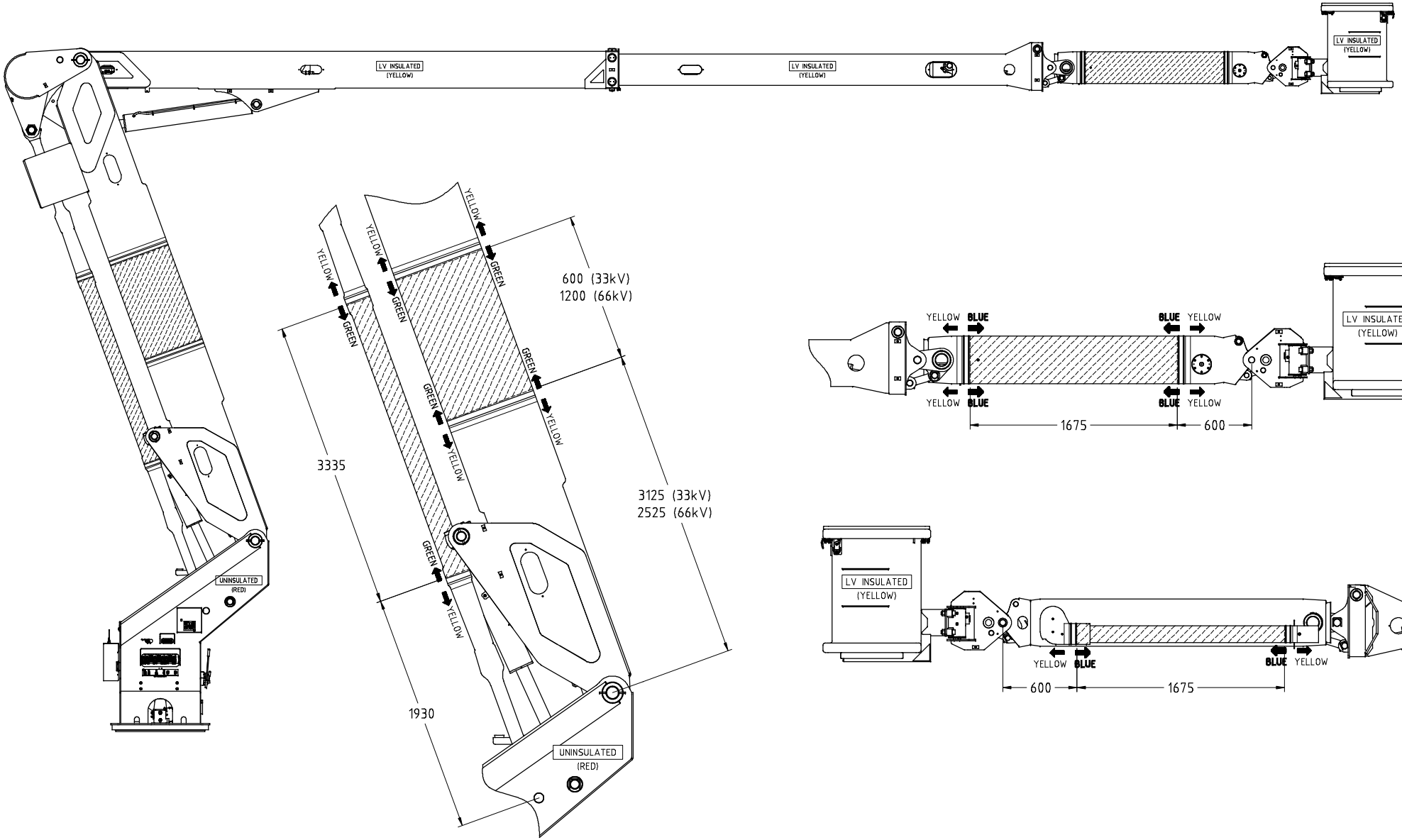


NIFTY-LIFT
ELEVATING WORK PLATFORMS

NL240KTF-HV INSULATION BANDS

24.04.46A

Assy #: **26.240KTFHV**

NL240KTFHV Tower Generic

| REV. | DESCRIPTION | DATE | BY |
|---|---|---|---|
| A | ASSEMBLY UPDATED, PARTS REVISED | 01/11/11 | PLV |

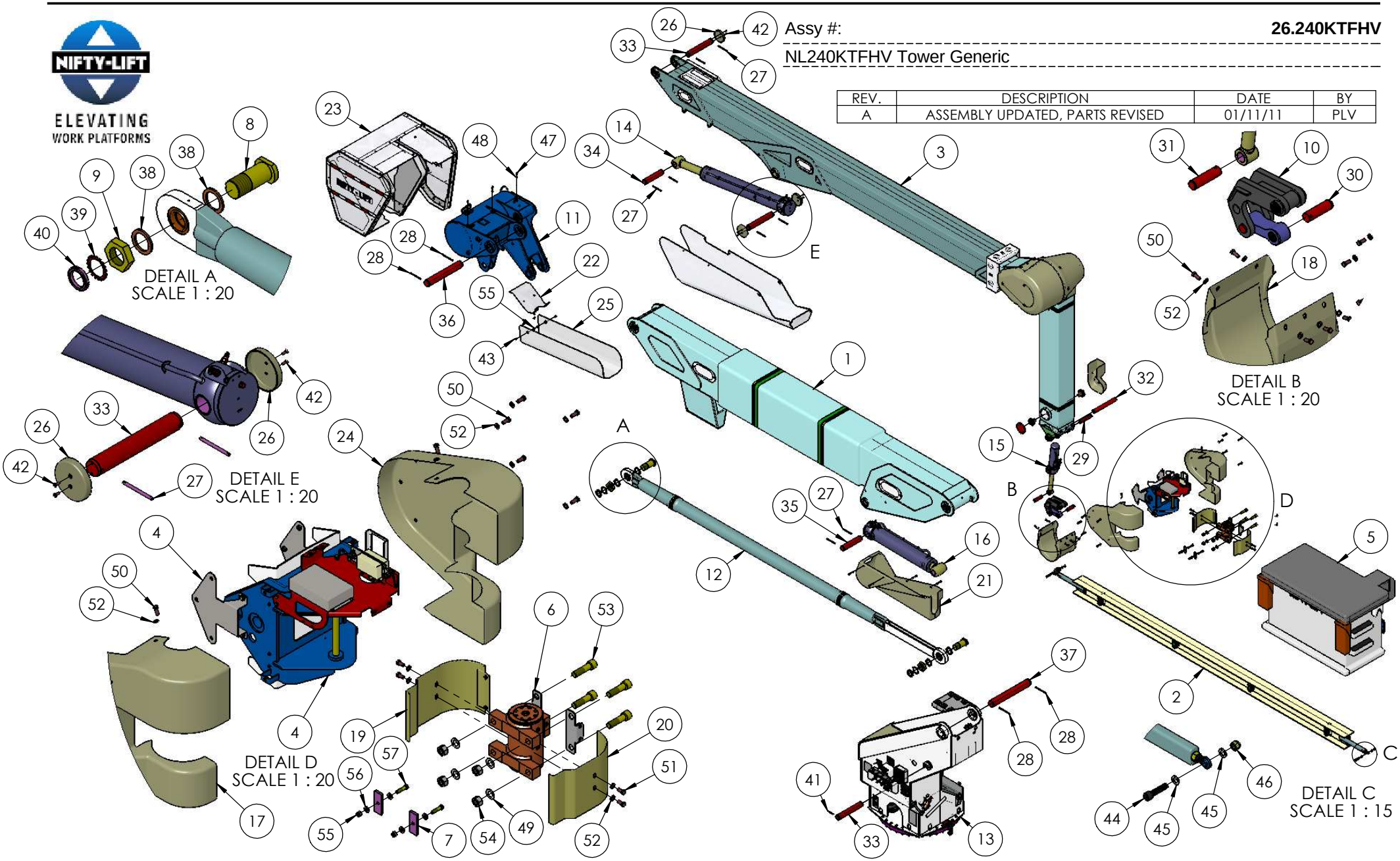

Assy #: **26.240KTFHV**

NL240KTFHV Tower Generic

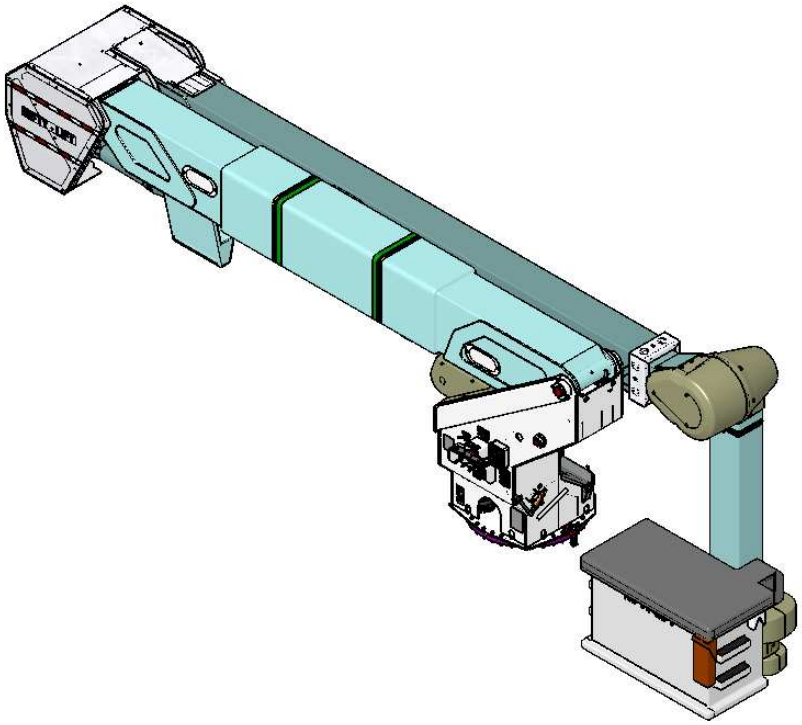

| | ITEM | Part Number | DESCRIPTION | STOWED/QTY |
|---|---|---|---|---|
| (IF FITTED) | 1 | 01.09.20 | Assy Bottom Boom 240KTF HV | 1 |
| | 2 | 01.09.39 | Assy Bottom Boom Hose Carrier 240KTF | 1 |
| | 3 | 02.03.81 | Assy Top Boom 240KTF HV | 1 |
| | 4 | 07.09.72 | Assy Bracket Basket Pivot Rotator 240KTF | 1 |
| (IF FITTED) | 5 | 07.10.23 | Assy Basket KTF 1500 Wide | 1 |
| | 6 | 07.10.50 | Bracket Cover Mnt Basket Rotator 240KTF | 2 |
| | 7 | 07.10.54 | Plate Basket Helac Rotator Adjustment KTF | 2 |
| | 8 | 08.02.92 | Bolt Levelling NL..RKT Dia 80 | 2 |
| | 9 | 08.02.93 | Nut Hex Levelling NL..RKT M80 | 2 |
| | 10 | 08.05.20 | Assy Basket Levelling 240KTF | 1 |
| | 11 | 08.05.37 | Assy Idler 240KTF | 1 |
| | 12 | 08.06.97 | Assembly Levelling Rod NL240KTF | 1 |
| | 13 | 09.06.71 | Assy Base 240KTF | 1 |
| | 14 | 10.99.29 (VICTOR 19186A) | Cylinder 7.0" 1740/3092 1352 Stroke (Victor 19186A) | 1 |
| | 15 | 10.99.34 (VICTOR 19469) | Cylinder 4.0" 120/430 310 Stroke Female Trunnion (Victor 19469) | 1 |
| | 16 | 10.99.39 | Cylinder 7.5" 1300/2203 903 Stroke | 1 |
| | 17 | 16.06.45-R | Cover Basket Pivot Bracket 240KTF RH | 1 |
| | 18 | 16.06.47 | Cover Fly Boom End Basket End LH 240KTF | 1 |
| | 19 | 16.06.49-L | Cover Basket Rotator 240KTF LH | 1 |
| | 20 | 16.06.49-R | Cover Basket Rotator 240KTF RH | 1 |
| | 21 | 16.06.60 | Cover Bottom Lift Cylinder 240KTF | 1 |
| | 22 | 16.06.71 | Cover Idler Lower 240KTF | 1 |
| | 23 | 16.06.88 | Assy Insulation Idler 240KTFHV | 1 |
| | 24 | 16.07.90 | Cover Basket Pivot Bracket KTF LH MKII LEVELING | 1 |
| | 25 | 16.08.24 | Cover Top Lift Cylinder Inner 240KTF | 1 |
| | 26 | 16.08.25 | Cover Cap Outer Boom Pivots 240KTF | 3 |
| | 27 | 91.12.04 | Pin SS Type 431 x 165 Long | 8 |
| | 28 | 91.12.05 | Pin SS Type 431 x 210 Long | 4 |
| | 29 | 91.40.17 | Pin SS Type 431 x 231 Long | 1 |
| | 30 | 91.40.22 | Pin SS Type 431 x 136 Long | 1 |
| | 31 | 91.40.30 | Pin SS Type 431 x 150 Long | 1 |
| | 32 | 91.50.10 | Pin SS Type 431 x 435 Long | 1 |
| | 33 | 91.75.03 | Pin SS Type 431 x 480 Long | 3 |
| | 34 | 91.75.04 | Pin SS Type 431 x 356 Long | 1 |
| | 35 | 91.75.05 | Pin SS Type 431 x 368 Long | 1 |
| | 36 | 91.99.01 | Pin SS Type 431 x 680 Long | 1 |
| | 37 | 91.99.02 | Pin SS Type 431 x 760 LONG | 1 |
| | 38 | 94.00.07 | Washer 110 x 80.2 x 8 MS | 4 |
| | 39 | MB16A | MB16A FAG Lock Washer | 2 |
| | 40 | KM16 | KM16 FAG Locknut | 2 |
| | 41 | ROLLPIN, M12 X 100LG | SPRING PIN | 1 |
| | 42 | NYLON SCREW CSK HD M8 - 25 | NYLON, CSK SCREW M8X25 | 6 |
| | 43 | NYLON SCREW CSK HD M12 - 25 | NYLON, CSK SCREW M12X25 | 2 |
| | 44 | UB,5/8"x2-3/4CAP | SCREW, SOC HD CAP | 2 |
| | 45 | WASHER FLAT METRIC-(M16) | WASHER, FLAT M16 HIGH TENSILE | 4 |
| | 46 | NYLOC NUT IMPERIAL | NUT, NYLOC 5/8" | 2 |
| | 47 | M12X30 BOLT ZINC | BOLT, HEX HD M12C X 30LG | 6 |
| | 48 | WASHER FLAT METRIC-(M12) | WASHER, FLAT M12 | 6 |
| | 49 | WASHER FLAT METRIC-(M24) | WASHER, FLAT M24 | 4 |
| | 50 | BOLT METRIC NYLON M12 | NYLON, HEX HD M12C X 30LG | 23 |
| | 51 | BOLT METRIC NYLON M12 | NYLON, HEX HD M12C X 25LG | 6 |
| | 52 | WASHER NYLON FLAT METRIC-(M12) | WASHER, NYLON FLAT M12 | 29 |
| | 53 | M24X90 UB CAP SCREW | SCREW, SOC HD CAP M24C X 90LG | 4 |
| | 54 | NUT-M24-PL | NUT HEX M24C PLAIN | 4 |
| | 55 | M12 | NUT, NYLOC M12C | 4 |
| | 56 | WASHER FLAT METRIC-(M12) | WASHER, FLAT M12 HIGH TENSILE | 4 |
| | 57 | M12X50 BOLT ZINC | BOLT, HEX HD M12C X 50LG | 2 |

Assy #: **01.09.20**

Assy Bottom Boom 240KTF HV

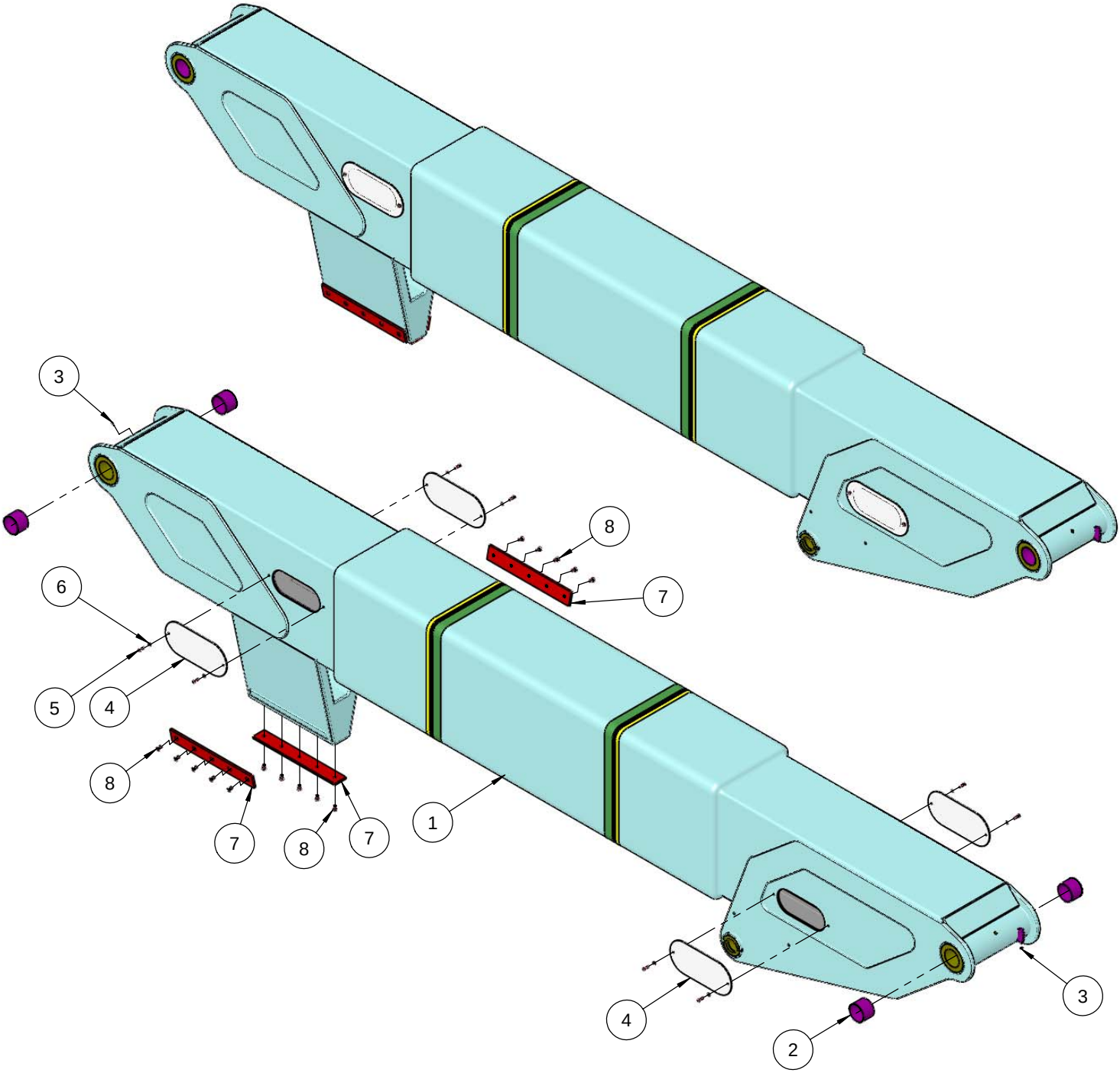


| | | | |
|---|---|---|---|
| 8 | NYLON SCREW CSK HD M12 - 25 | NYLON, CSK SCREW M12X25 | 15 |
| 7 | 01.09.38 | WEARPAD UHMWPE | 3 |
| 6 | WASHER NYLON FLAT METRIC-(M8) | WASHER, NYLON FLAT M8 | 8 |
| 5 | BOLT METRIC NYLON M8 | NYLON, HEX HD M8C X 30LG | 8 |
| 4 | 16.06.51 | Cover Bottom Boom Inspection Opening 240KTF | 4 |
| 3 | B38-30 | GREASE NIPPLE, STR M6 X 1.0 | 2 |
| 2 | 64DU48 | BUSH, GLACIER 4 X 4-3/16 X 3 | 4 |
| 1 | FG01.09.20 | Fibreglass Bottom Boom 240KTF | 1 |
| ITEM | Part_Number | DESCRIPTION | QTY |

Assy #: **01.10.79**

Assy Bottom Boom 240KTF HV 33kV

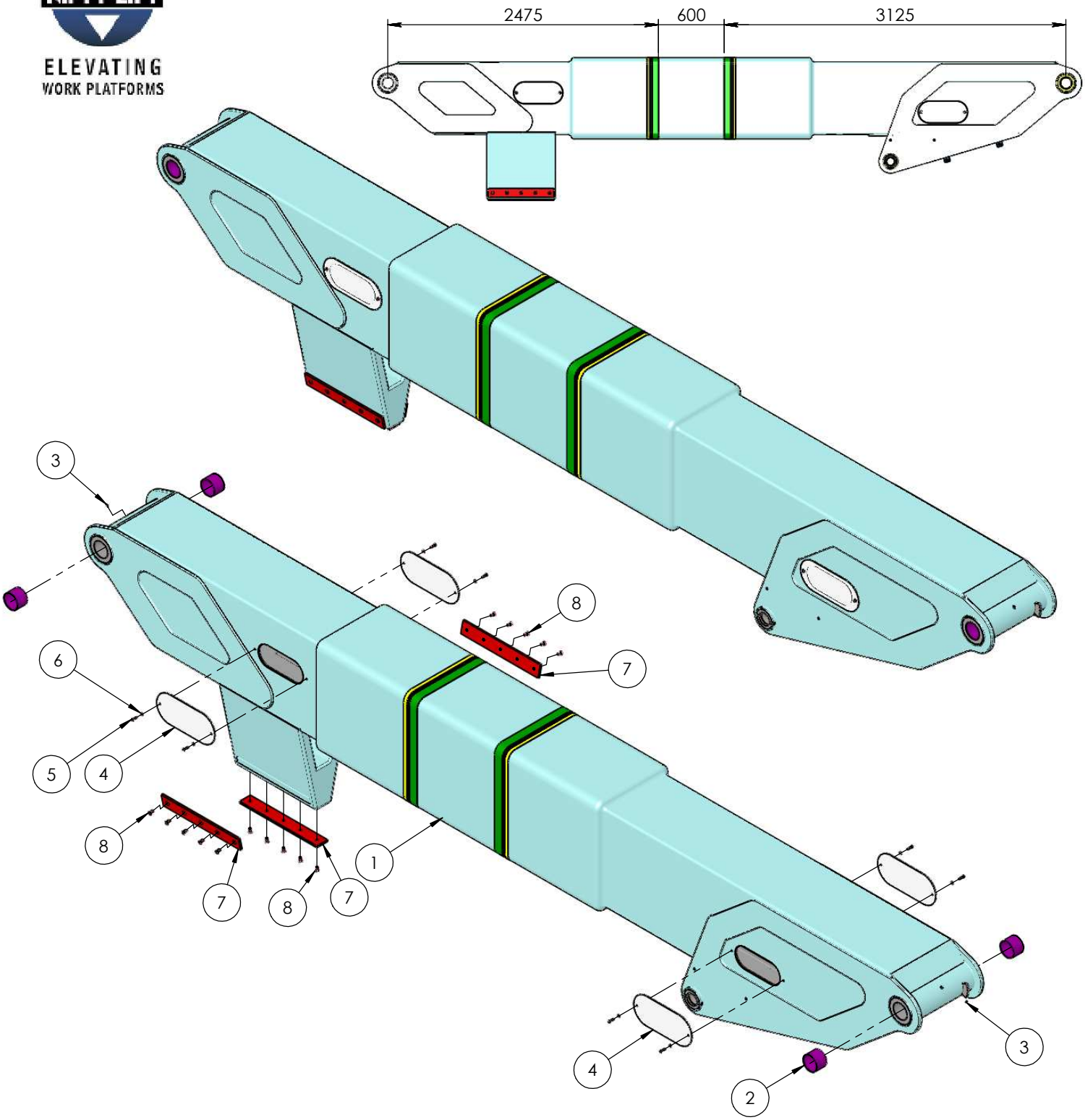


| ITEM | Part_Number | DESCRIPTION | QTY |
|---|---|---|---|
| 1 | FG01.10.79 | Fibreglass Bottom Boom 240KTF 33kV | 1 |
| 2 | 64DU48 | BUSH, GLACIER 4 X 4-3/16 X 3 | 4 |
| 3 | B38-30 | GREASE NIPPLE, STR M6 X 1.0 | 2 |
| 4 | 16.06.51 | Cover Bottom Boom Inspection Opening 240KTF | 4 |
| 5 | BOLT METRIC NYLON M8 | NYLON, HEX HD M8C X 30LG | 8 |
| 6 | WASHER NYLON FLAT METRIC-(M8) | WASHER, NYLON FLAT M8 | 8 |
| 7 | 01.09.38 | WEARPAD UHMWPE | 3 |
| 8 | NYLON SCREW CSK HD M12 - 25 | NYLON, CSK SCREW M12X25 | 15 |

Assy #: **01.09.39**

Assy Bottom Boom Hose Carrier 240KTF

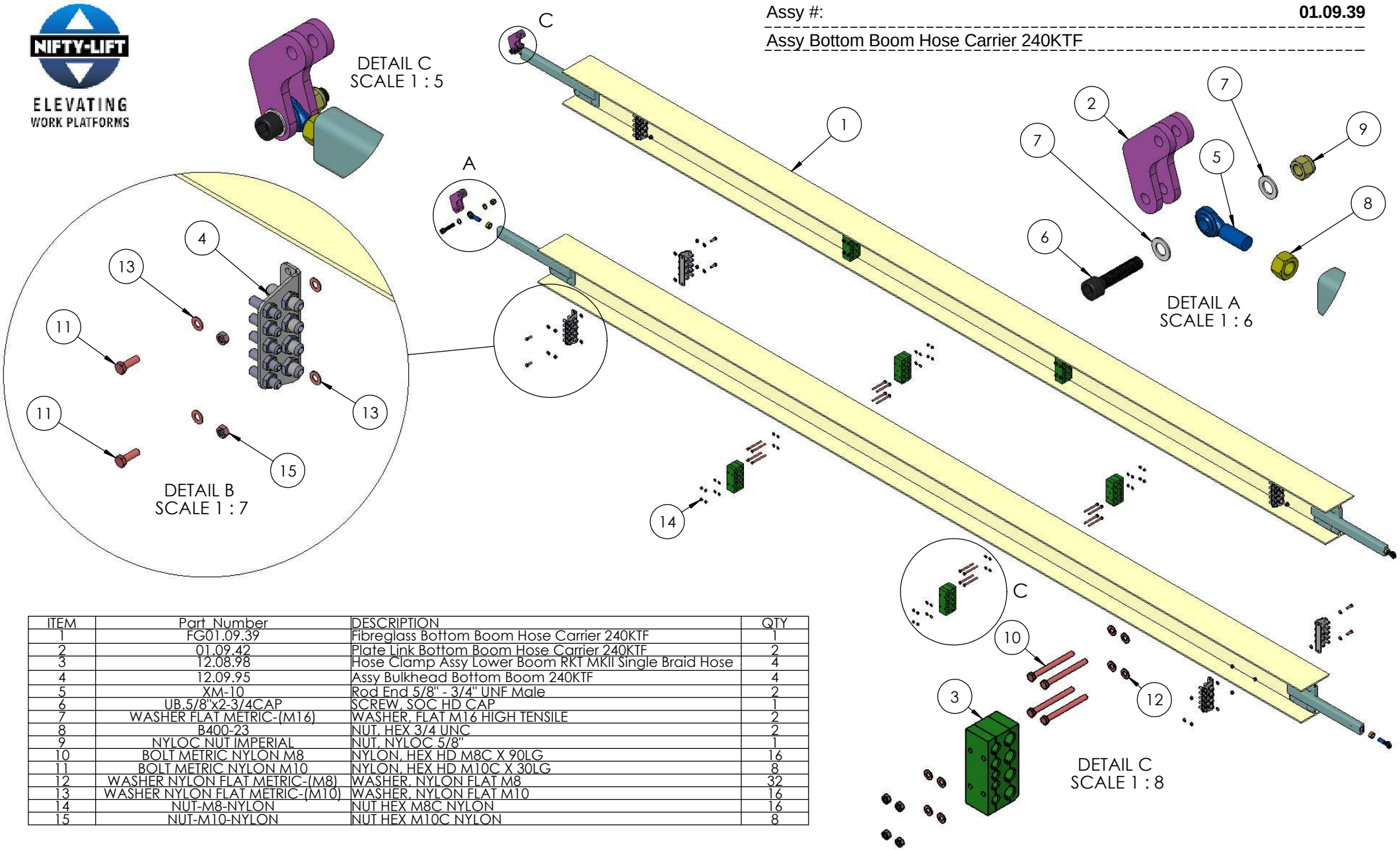


| ITEM | Part_Number | DESCRIPTION | QTY |
|---|---|---|---|
| 1 | FG01.09.39 | Fibreglass Bottom Boom Hose Carrier 240KTF | 1 |
| 2 | 01.09.42 | Plate Link Bottom Boom Hose Carrier 240KTF | 2 |
| 3 | 12.08.98 | Hose Clamp Assy Lower Boom RKT MKII Single Braid Hose | 4 |
| 4 | 12.09.95 | Assy Bulkhead Bottom Boom 240KTF | 4 |
| 5 | XM-10 | Rod End 5/8" - 3/4" UNF Male | 2 |
| 6 | UB.5/8"x2-3/4CAP | SCREW, SOC HD CAP | 1 |
| 7 | WASHER FLAT METRIC-(M16) | WASHER, FLAT M16 HIGH TENSILE | 2 |
| 8 | B400-23 | NUT, HEX 3/4 UNC | 2 |
| 9 | NYLOC NUT IMPERIAL | NUT, NYLOC 5/8" | 1 |
| 10 | BOLT METRIC NYLON M8 | NYLON, HEX HD M8C X 90LG | 16 |
| 11 | BOLT METRIC NYLON M10 | NYLON, HEX HD M10C X 30LG | 8 |
| 12 | WASHER NYLON FLAT METRIC-(M8) | WASHER, NYLON FLAT M8 | 32 |
| 13 | WASHER NYLON FLAT METRIC-(M10) | WASHER, NYLON FLAT M10 | 16 |
| 14 | NUT-M8-NYLON | NUT HEX M8C NYLON | 16 |
| 15 | NUT-M10-NYLON | NUT HEX M10C NYLON | 8 |

Assy #: **02.03.64**

Assy Outer Boom 240KTF LV

| REV. | DESCRIPTION | DATE | BY |
|---|---|---|---|
| A | 02.03.65 REVISED | 26/09/2011 | PLV |

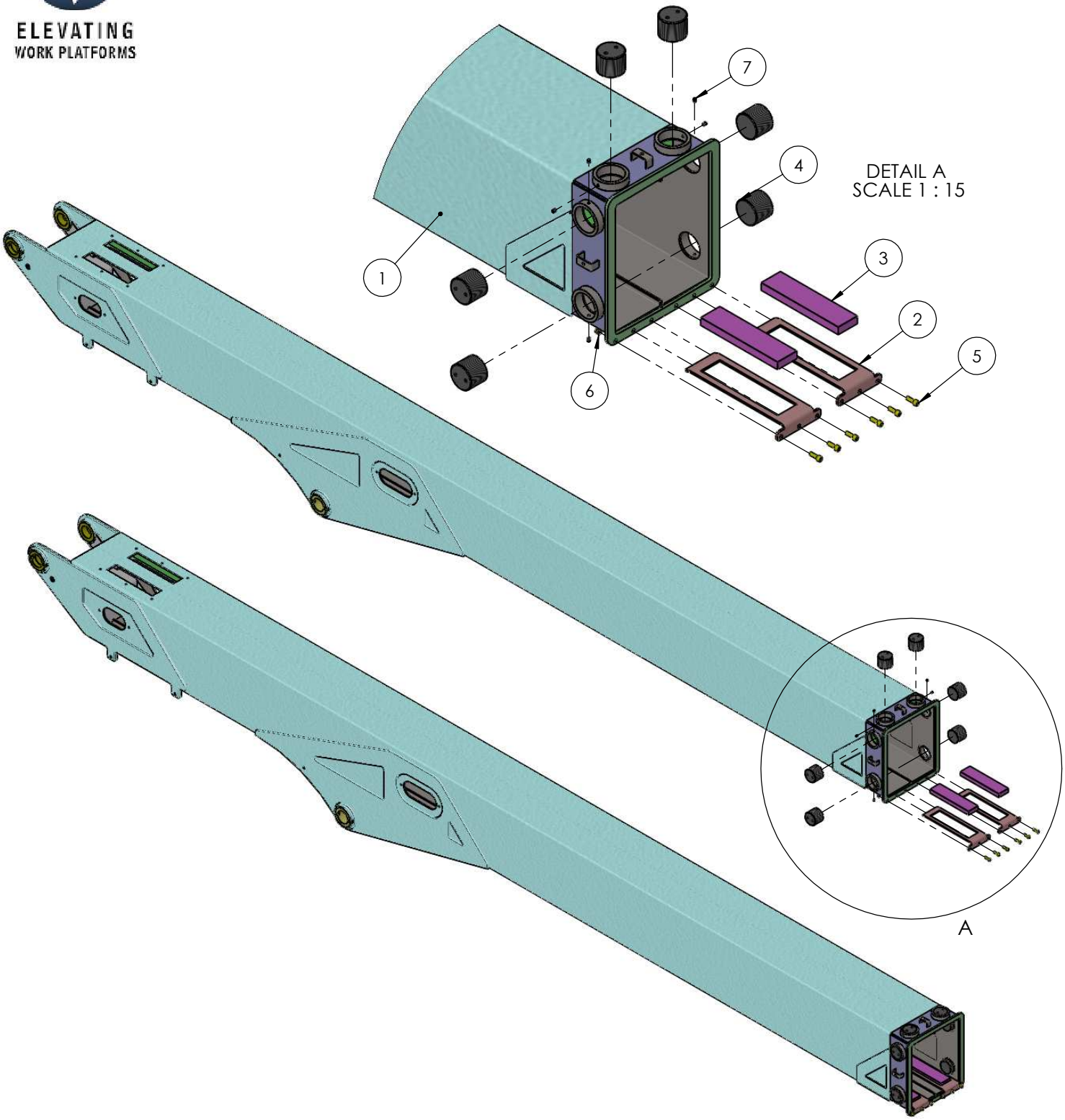


| ITEM | Part_Number | DESCRIPTION | QTY |
|---|---|---|---|
| 1 | FG02.03.64 | Fibreglass Outer Boom 240KTF LV | 1 |
| 2 | 02.03.79 | Folding Outer Boom Wearpad Retainer KTF | 2 |
| 3 | 02.03.80-26 | Wearpad 300 X 75 26mm | 2 |
| 4 | 02.03.28-65 | Wearpad Threaded M80X2.0 65mm | 6 |
| 5 | VP03-156 | SCREW, SOC HD CAP M10C X 30LG | 6 |
| 6 | M10 | NUT, NYLOC M10C | 6 |
| 7 | VP05-4 | GRUBSCREW M8 | 6 |

Assy #: **02.03.81**

Assy Top Boom 240KTF HV

| REV. | DESCRIPTION | DATE | BY |
|---|---|---|---|
| A | REDESIGNED | 27/09/2011 | PLV |

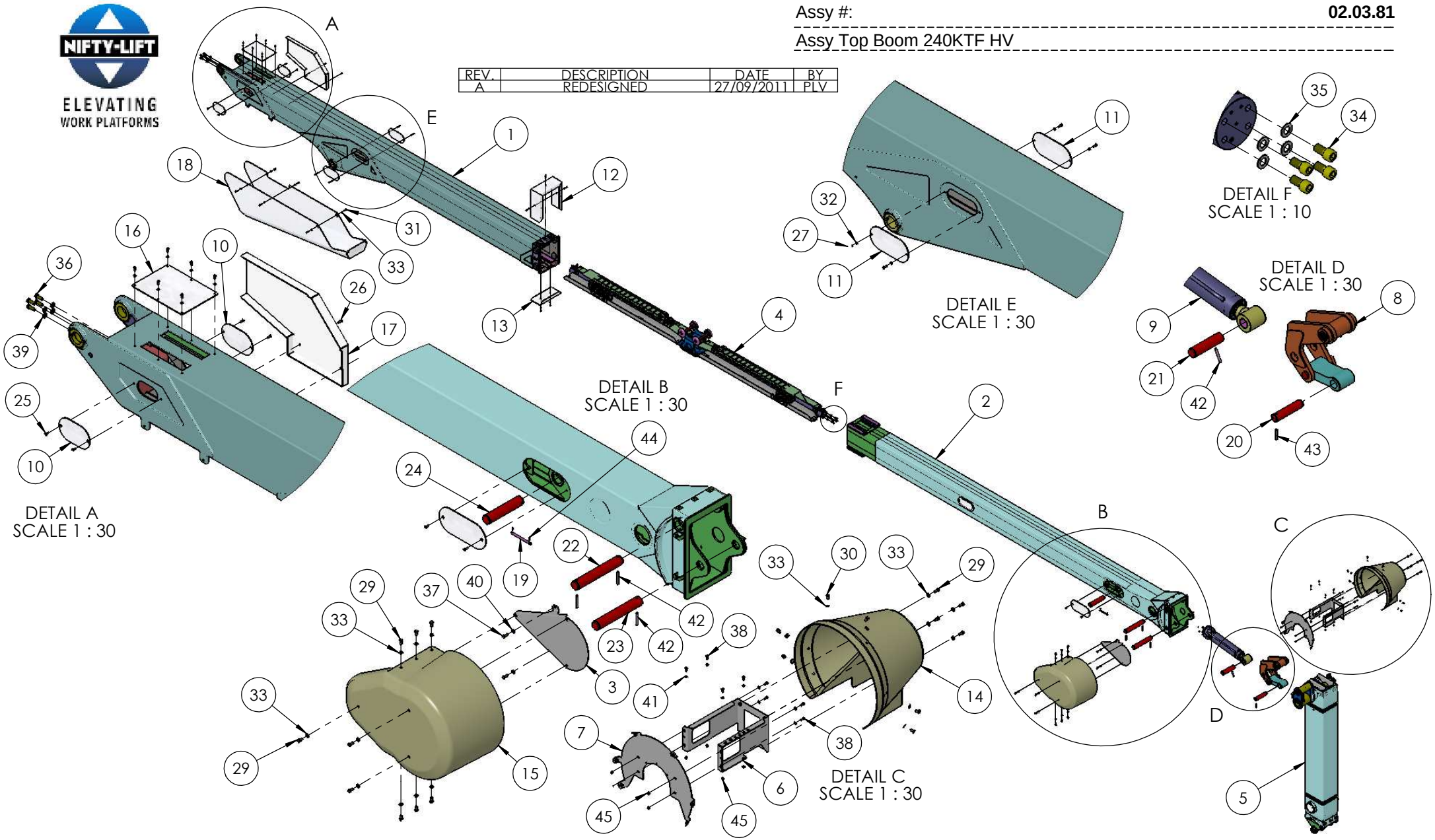

Assy #: **02.03.81**

Assy Top Boom 240KTF HV

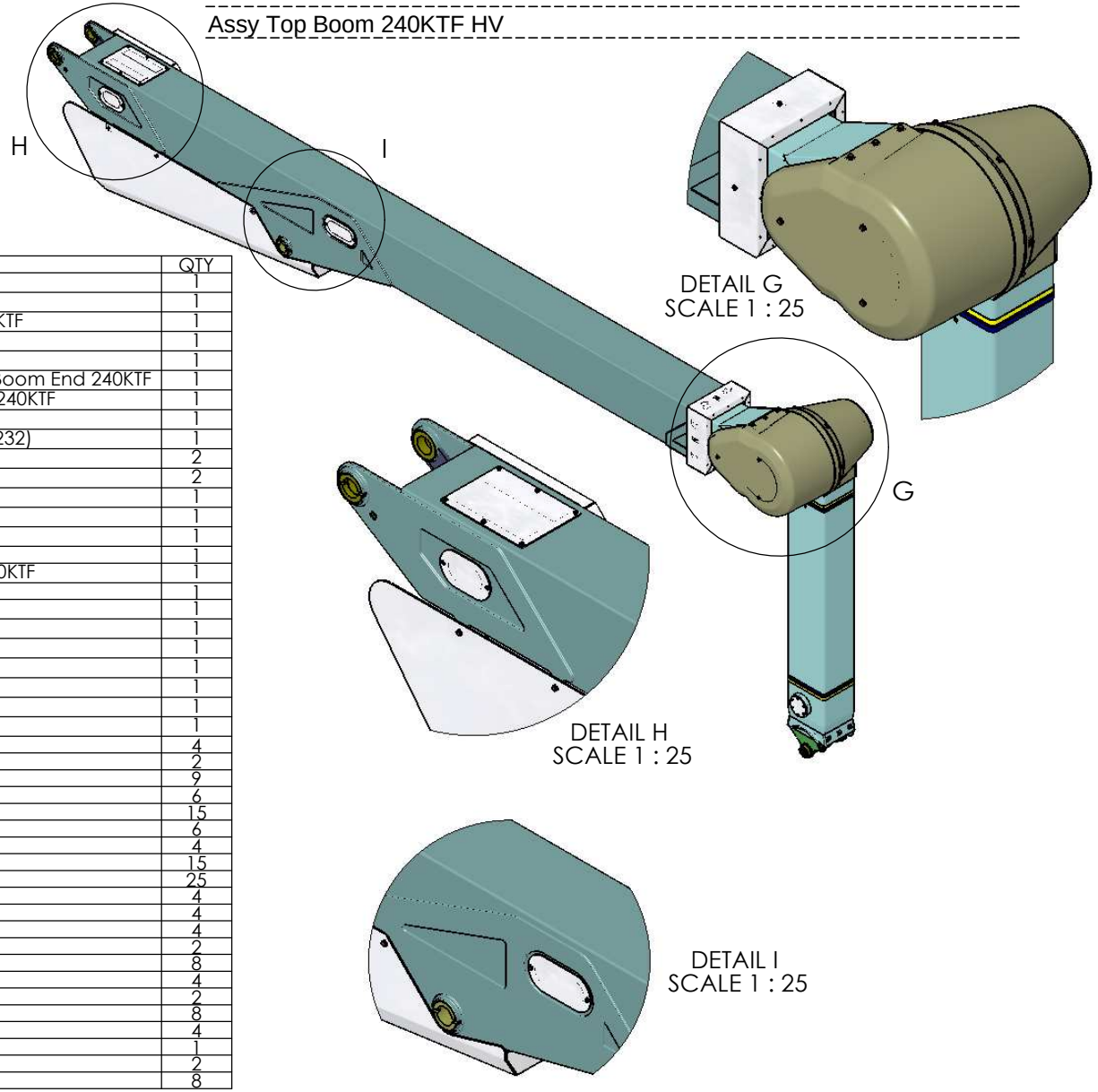


| ITEM | Part Number | DESCRIPTION | QTY |
|---|---|---|---|
| 1 | 02.03.64 | Assy Outer Boom 240KTF LV | 1 |
| 2 | 03.03.89 | Assy Inner Boom 240KTF LV | 1 |
| 3 | 03.04.33 | Folding Bracket Cover Mtg Inner Boom 240KTF | 1 |
| 4 | 03.05.25 | Assy Extension Drive 240KTF | 1 |
| 5 | 04.00.14 | Assy Fly Boom 240KTF HV | 1 |
| 6 | 04.00.35 | Folding Bracket Cover Mtg Fly Boom Inner Boom End 240KTF | 1 |
| 7 | 04.00.42 | Plate Cover Mtg Fly Boom Inner Boom End 240KTF | 1 |
| 8 | 08.05.26 | Assy Fly Boom Levelling 240KTF | 1 |
| 9 | 10.99.25 (VICTOR 19232) | Cylinder 5.0" 798/1263 465 Stroke (Victor 19232) | 1 |
| 10 | 16.01.06 | Cover Inspection Opening Short | 2 |
| 11 | 16.01.66 | Cover Inspection Opening Long | 2 |
| 12 | 16.05.69 | Cover Outer Boom Flange Top RKT MKII | 1 |
| 13 | 16.05.70 | Cover Outer Boom Flange Bottom RKT MKII | 1 |
| 14 | 16.06.39 | Cover Fly Boom Inner Boom End 240KTF | 1 |
| 15 | 16.06.40 | Cover Inner Boom End 240KTF | 1 |
| 16 | 16.06.42 | Cover Outer Boom Wearpad Inspection 240KTF | 1 |
| 17 | 16.06.87 | Cover Outer Boom Hoses KTF | 1 |
| 18 | 16.08.23 | Cover Top Lift Cylinder 240KTF | 1 |
| 19 | 91.12.04 | Pin SS Type 431 x 165 Long | 1 |
| 20 | 91.50.13 | Pin SS Type 431 225 Long | 1 |
| 21 | 91.60.16 | Pin SS Type 431 245 Long | 1 |
| 22 | 91.60.17 | Pin SS Type 431 388 Long | 1 |
| 23 | 91.60.18 | Pin SS Type 431 365 Long | 1 |
| 24 | 91.60.19 | Pin SS Type 431 293 Long | 1 |
| 25 | NYLON SCREW CSK HD M8 - 25 | NYLON, CSK SCREW M8X25 | 4 |
| 26 | NYLON SCREW CSK HD M10 - 25 | NYLON, CSK SCREW M10X25 | 2 |
| 27 | BOLT METRIC NYLON M8 | NYLON, HEX HD M8C X 25LG | 9 |
| 28 | BOLT METRIC NYLON M8 | NYLON, HEX HD M8C X 20LG | 6 |
| 29 | BOLT METRIC NYLON M12 | NYLON, HEX HD M12C X 25LG | 15 |
| 30 | BOLT METRIC NYLON M12 | NYLON, HEX HD M12C X 20LG | 6 |
| 31 | BOLT METRIC NYLON M12 | NYLON, HEX HD M12C X 35LG | 4 |
| 32 | WASHER NYLON FLAT METRIC-(M8) | WASHER, NYLON FLAT M8 | 15 |
| 33 | WASHER NYLON FLAT METRIC-(M12) | WASHER, NYLON FLAT M12 | 25 |
| 34 | M16X30 UB CAP SCREW | SCREW, SOC HD CAP M16C X 30LG | 4 |
| 35 | WASHER FLAT METRIC-(M16) | WASHER, FLAT M16 HIGH TENSILE | 4 |
| 36 | M16X45 BOLT ZINC | BOLT, HEX HD M16C X 45LG | 4 |
| 37 | M12X30 BOLT ZINC | BOLT, HEX HD M12C X 30LG | 2 |
| 38 | M8X20 BOLT ZINC | BOLT, HEX HD M8C X 20LG | 8 |
| 39 | WASHER FLAT METRIC-(M16) | WASHER, FLAT M16 | 4 |
| 40 | WASHER FLAT METRIC-(M12) | WASHER, FLAT M12 | 2 |
| 41 | WASHER FLAT METRIC-(M8) | WASHER, FLAT M8 | 8 |
| 42 | ROLLPIN, M12 X 90LG | SPRING PIN | 4 |
| 43 | ROLLPIN, M12 X 75LG | SPRING PIN | 1 |
| 44 | ROLLPIN, M5 X 20LG | SPRING PIN | 2 |
| 45 | M8 | NUT, NYLOC M8C | 8 |

Assy #: **03.03.89**

Assy Inner Boom 240KTF LV

| REV. | DESCRIPTION | DATE | BY |
|---|---|---|---|
| A | 03.04.04 & 03.03.90 REVISED | 09/08/2011 | DW |

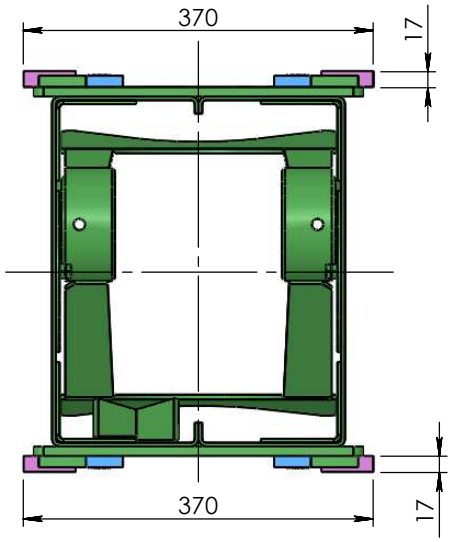


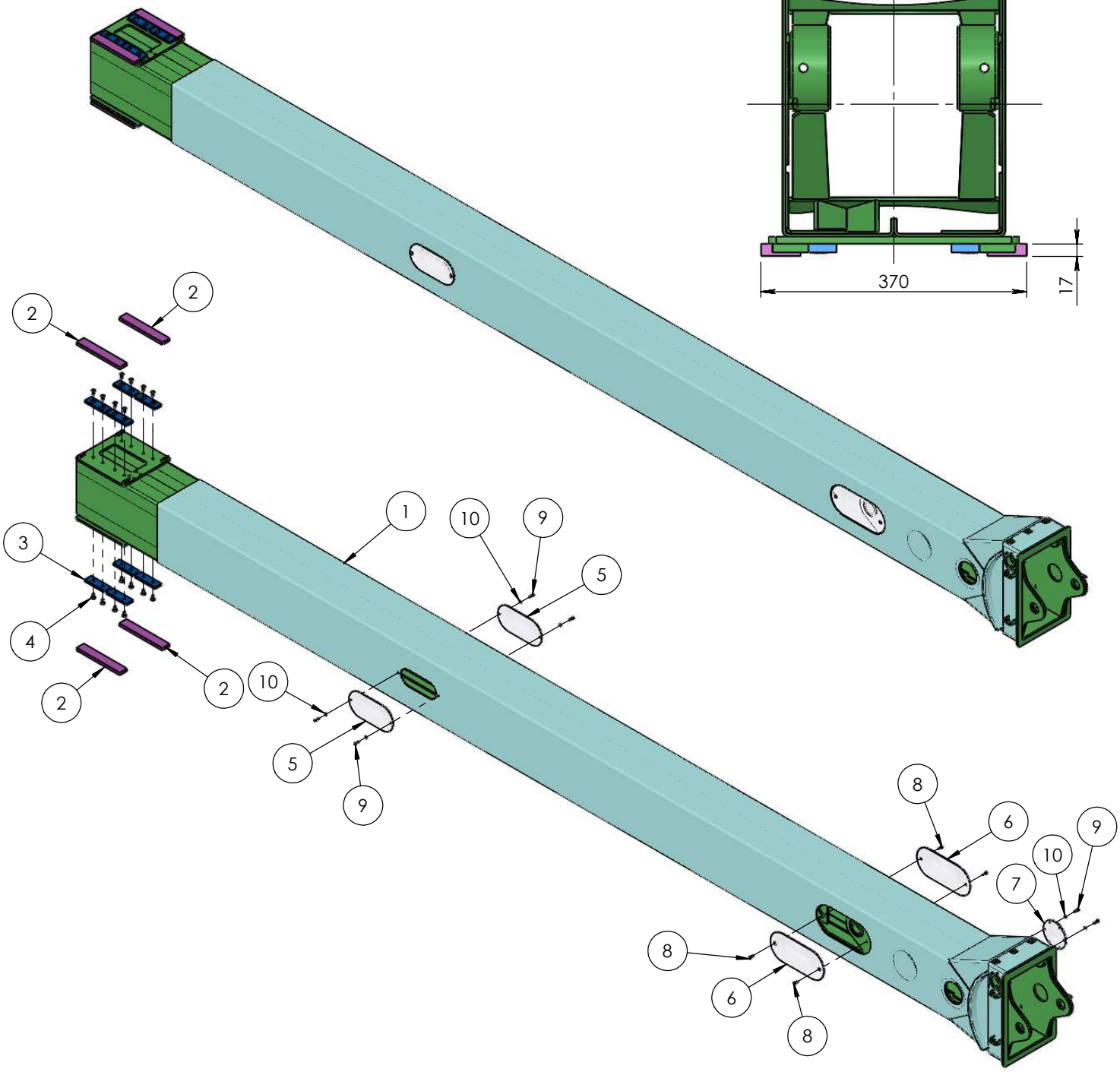


| ITEM | Part_Number | DESCRIPTION | QTY |
|---|---|---|---|
| 1 | FG03.03.89 | Fibreglass Inner Boom 240KTF LV | 1 |
| 2 | 03.04.10-# | Wearpad 160 X 55 Thickness To Suit | 4 |
| 3 | 03.01.46 | Plate Wearpad Retainer Inner Boom RKT | 8 |
| 4 | UB.M12X25CSK | Unbrako Countersunk M12 x 25 | 16 |
| 5 | 16.01.66 | Cover Inspection Opening Long | 2 |
| 6 | 16.06.41 | Cover Inner Boom Inspection Opening 240KTF | 2 |
| 7 | 16.06.46 | Cover Inner Boom Inspection Opening Circular 240KTF | 1 |
| 8 | NYLON SCREW CSK HD M8 - 25 | NYLON, CSK SCREW M8X25 | 4 |
| 9 | BOLT METRIC NYLON M8 | NYLON, HEX HD M8C X 25LG | 6 |
| 10 | WASHER NYLON FLAT METRIC-(M8) | WASHER, NYLON FLAT M8 | 6 |

Assy #: **03.05.14**

Assy Extension Cylinder Support 240KTF

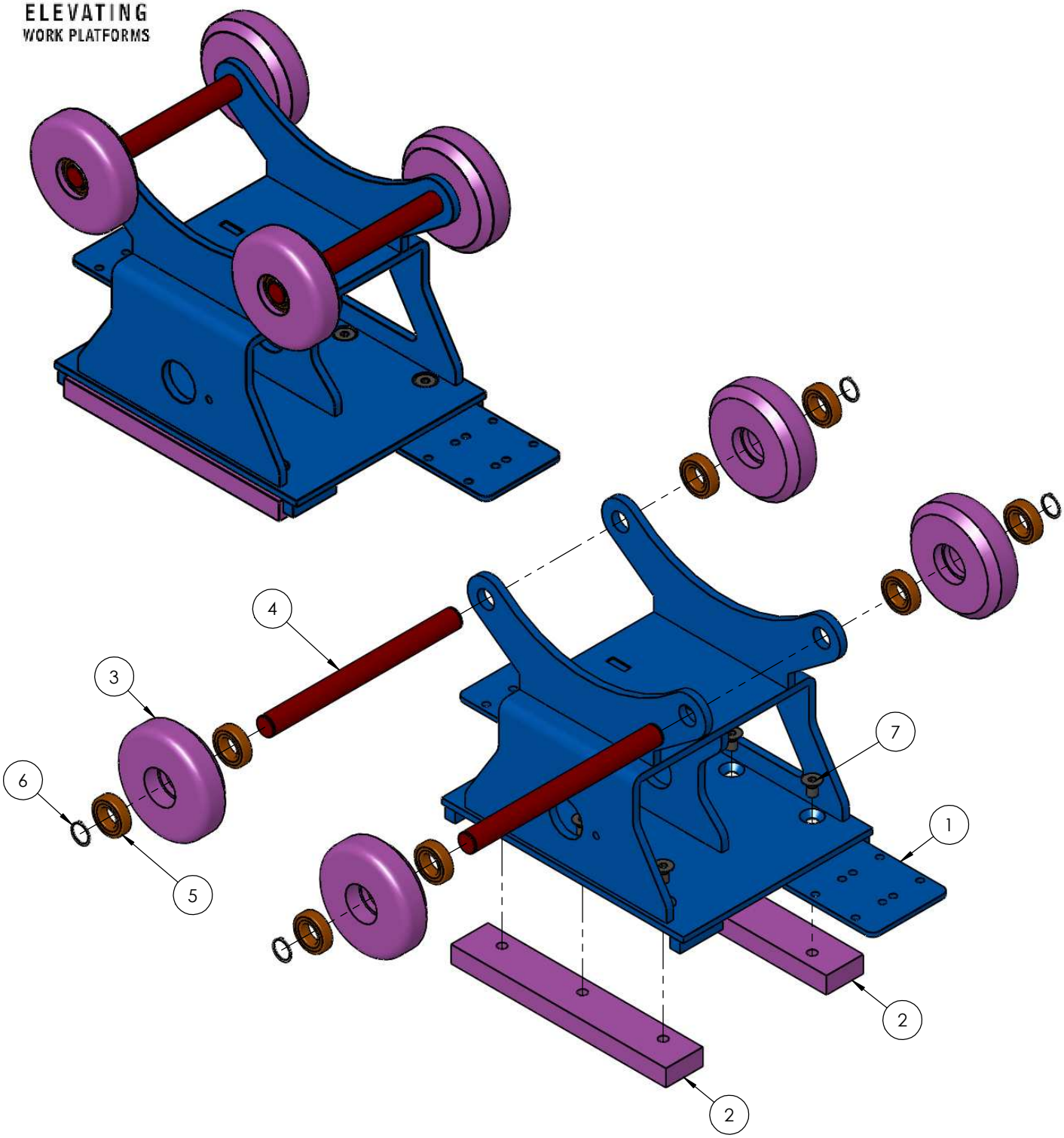


| ITEM | Part_Number | DESCRIPTION | QTY |
|---|---|---|---|
| 1 | 03.05.20 | Weldment Extension Drive Tele Cylinder Support 240KTF | 1 |
| 2 | 03.04.26-25 | Wearpad 320 X 55 25mm | 2 |
| 3 | 03.04.34 | Wheel Guide Extension Drive 240KTF | 4 |
| 4 | 91.25.16 | Pin Extension Drive Guide Wheel 240KTF | 2 |
| 5 | 60052RS | SKF Deep Groove Ball Bearing 25mm | 8 |
| 6 | D-1400-0250-A | CIRCLIP, EXTERNAL - 25MM | 4 |
| 7 | B131-181 | SCREW, CSK M12C X 20LG | 6 |

Assy #: **03.05.25**

Assy Extension Drive 240KTF

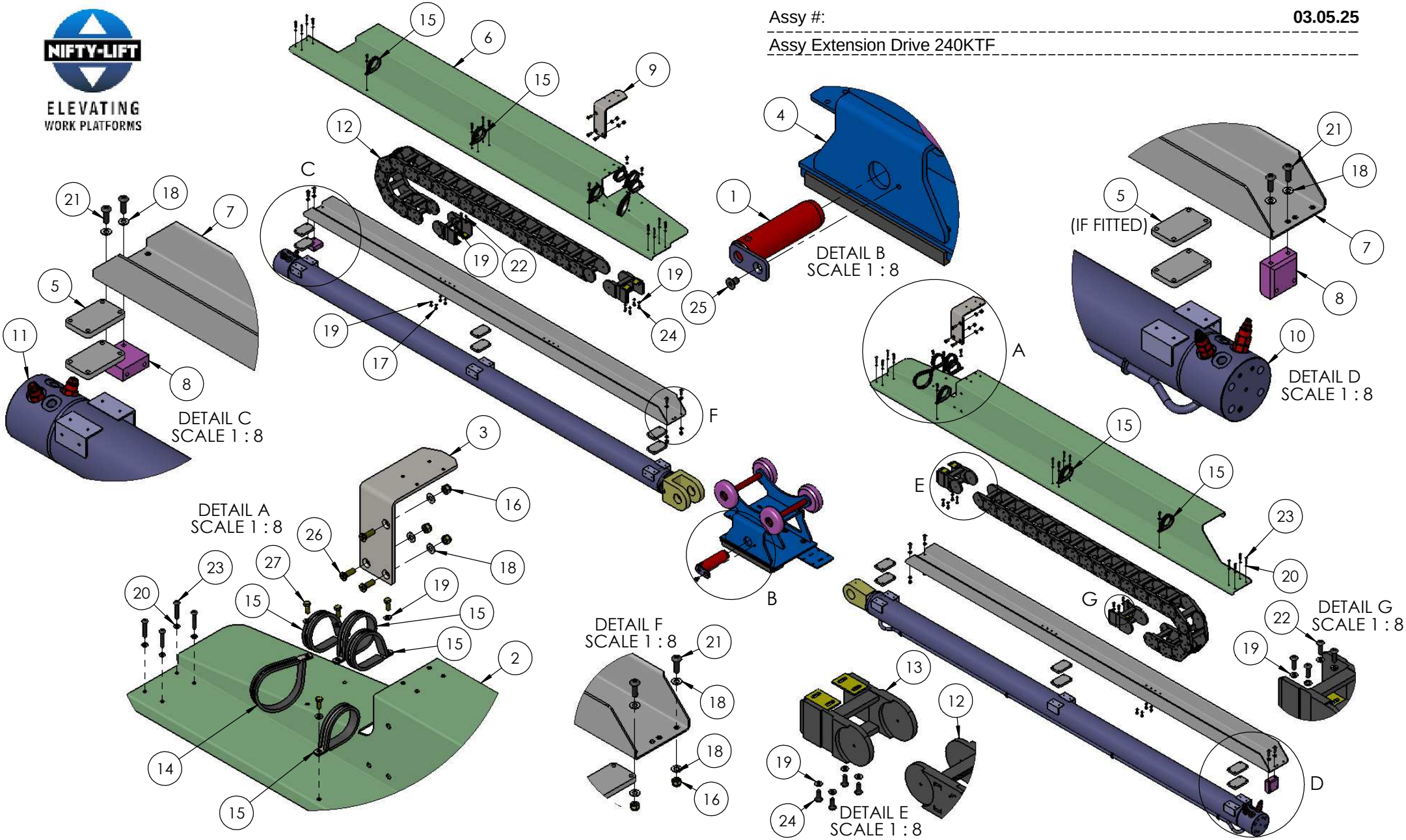

Assy #: **03.05.25**

Assy Extension Drive 240KTF

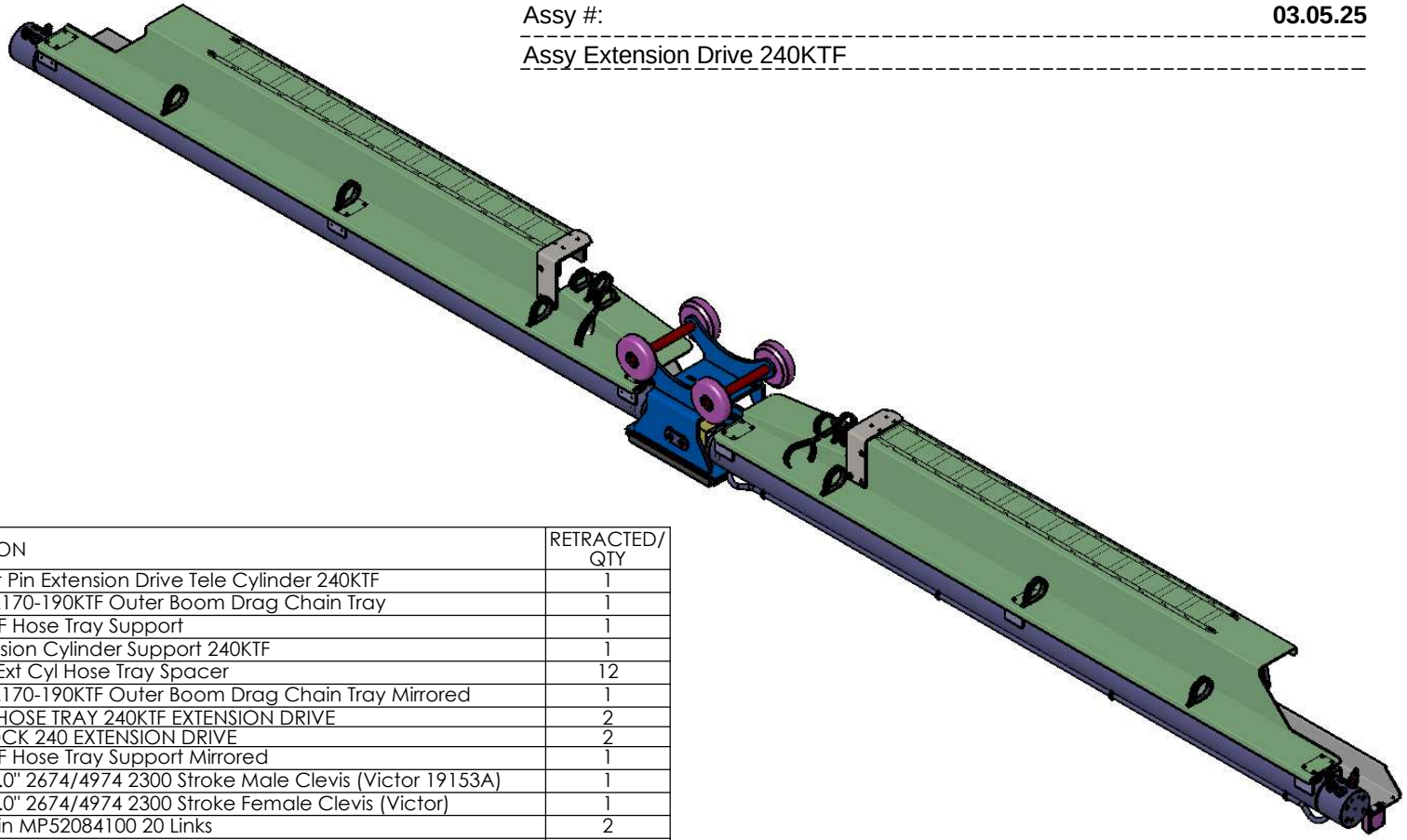

| ITEM | Part_Number | DESCRIPTION | RETRACTED/ QTY |
|---|---|---|---|
| 1 | 03.04.24 | Weldment Pin Extension Drive Tele Cylinder 240KTF | 1 |
| 2 | 03.04.52 | Folding NL170-190KTF Outer Boom Drag Chain Tray | 1 |
| 3 | 03.04.55 | Folding KTF Hose Tray Support | 1 |
| 4 | 03.05.14 | Assy Extension Cylinder Support 240KTF | 1 |
| 5 | 03.05.21 | Plate 240 Ext Cyl Hose Tray Spacer | 12 |
| 6 | 03.05.22 | Folding NL170-190KTF Outer Boom Drag Chain Tray Mirrored | 1 |
| 7 | 03.05.23 | FOLDING HOSE TRAY 240KTF EXTENSION DRIVE | 2 |
| 8 | 03.05.24 | WEAR BLOCK 240 EXTENSION DRIVE | 2 |
| 9 | 03.05.26 | Folding KTF Hose Tray Support Mirrored | 1 |
| 10 | 10.99.26 (VICTOR 19153A) | Cylinder 4.0" 2674/4974 2300 Stroke Male Clevis (Victor 19153A) | 1 |
| 11 | 10.99.31 (VICTOR 19200A) | Cylinder 4.0" 2674/4974 2300 Stroke Female Clevis (Victor) | 1 |
| 12 | MP52084100 | Drag Chain MP52084100 20 Links | 2 |
| 13 | MP52084100ENDBRKT | Drag Chain MP52084100 End Bracket | 4 |
| 14 | PS15 | PS15 Narva P-Clamp | 2 |
| 15 | PS13 | PS13 Narva P-Clamp | 12 |
| 16 | M8 | NUT, NYLOC M8C | 10 |
| 17 | M6 | NUT, NYLOC M6C | 8 |
| 18 | WASHER FLAT METRIC-(M8) | WASHER, FLAT M8 | 18 |
| 19 | WASHER FLAT METRIC-(M6) | WASHER, FLAT M6 | 36 |
| 20 | WASHER FLAT METRIC-(M5) | WASHER, FLAT M5 | 24 |
| 21 | SCREW, PN HD CR M8C X 25LG | SCREW, PN HD CR M8C X 25LG | 8 |
| 22 | SCREW, PN HD CR M6C X 20LG | SCREW, PN HD CR M6C X 20LG | 8 |
| 23 | SCREW, PN HD CR M5C X 30LG | SCREW, PN HD CR M5C X 30LG | 24 |
| 24 | SCREW, PN HD CR M6C X 16LG | SCREW, PN HD CR M6C X 16LG | 8 |
| 25 | B131-151 | SCREW, CSK M10C X 16LG | 1 |
| 26 | M8 X 25 CSK SCREW | SCREW, CSK HD CR M8C X 25LG | 6 |
| 27 | M6x15 BOLT ZINC | BOLT, HEX HD M6C X 15LG | 12 |

| REV. | DESCRIPTION | DATE | BY |
|---|---|---|---|
| A | CYLINDER&MOUNT REDESIGNED, TOOLS REMOVED, BOOM REVISED | 18/12/2009 | PLV |
| B | HOSE TRAY WAS 16.06.83 | 10/02/2010 | DW |
| C | FG04.04.14 REVISED, 04.00.47 REMOVED, 16.06.43 REPLACED BY 16.06.46 | 23/08/2011 | PLV |

Assy #: **04.00.14**

Assy Fly Boom 240KTF HV

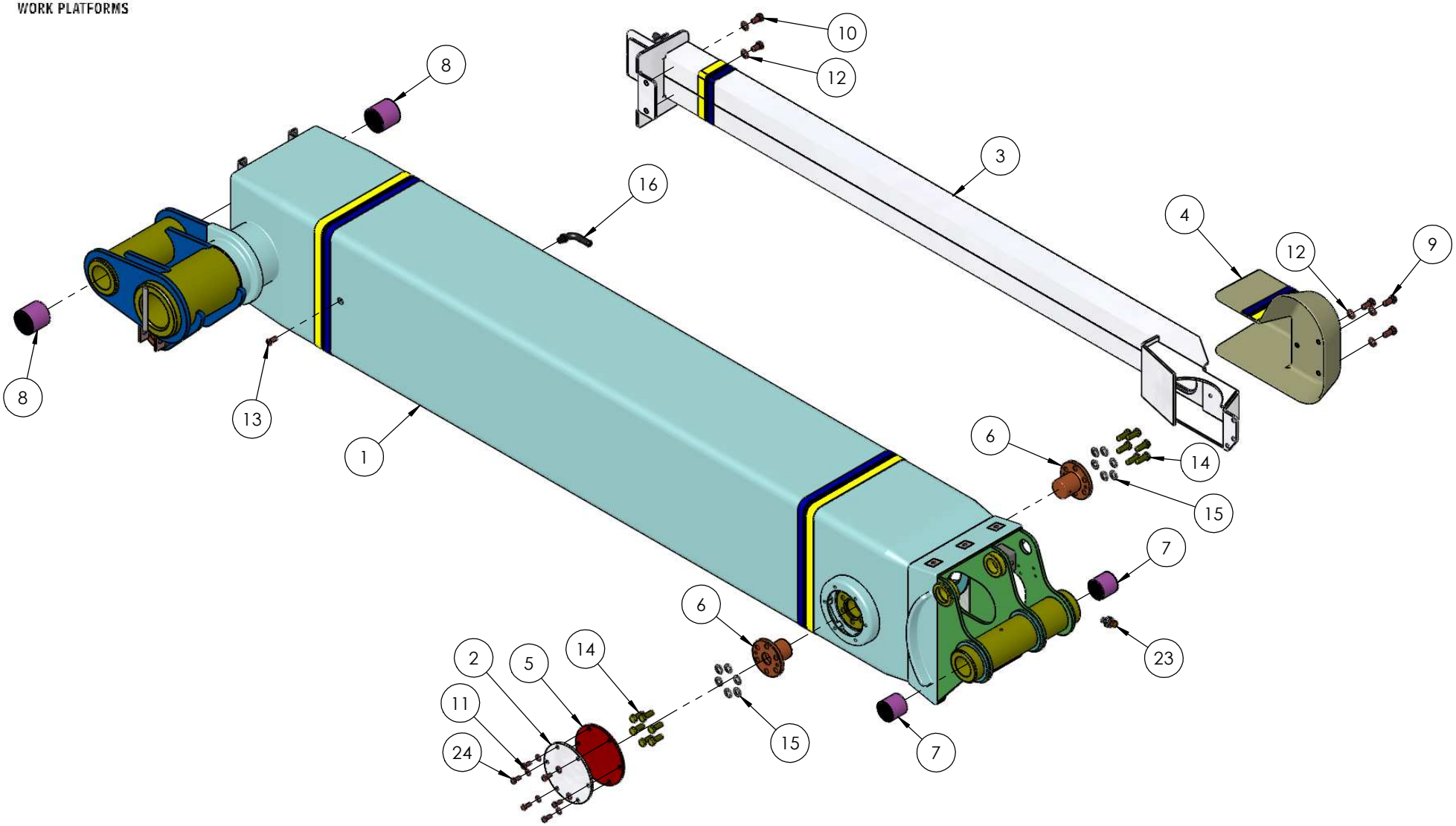

Assy #: **04.00.14**

Assy Fly Boom 240KTF HV

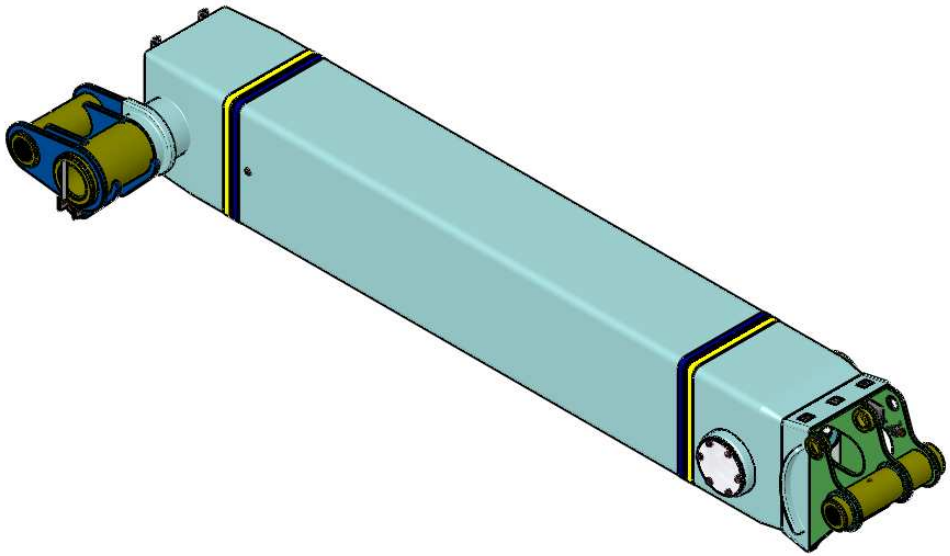

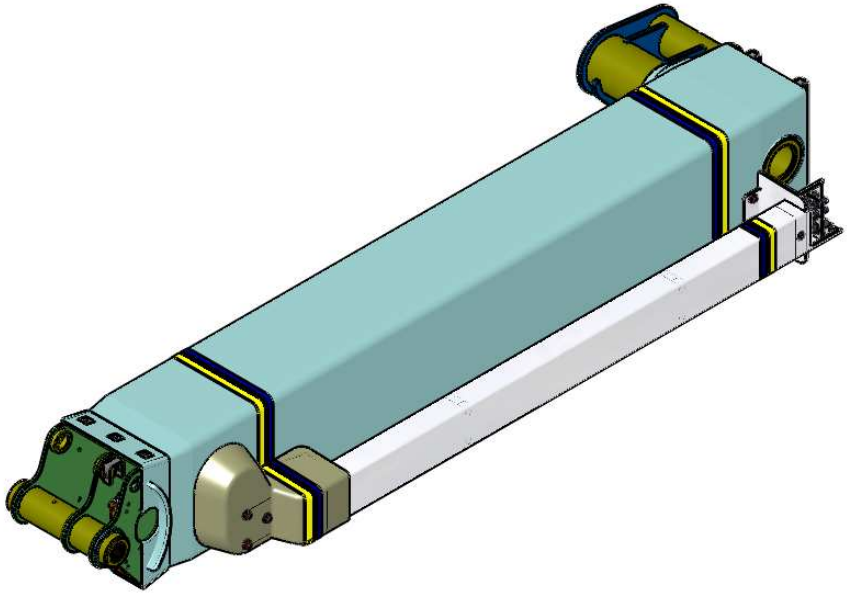

| ITEM | Part Number | DESCRIPTION | QTY |
|---|---|---|---|
| 1 | FG04.00.14 | Fibreglass Fly Boom 240KTF HV | 1 |
| 2 | 16.06.46 | Cover Inner Boom Inspection Opening Circular 240KTF | 1 |
| 3 | 16.07.57 | Assy Cover Fly Boom Hose Tube KTF | 1 |
| 4 | 16.07.59 | Cover Fly Boom Hose Tube Basket End 240KTF | 1 |
| 5 | 16.08.38 | Plate KTF Turn Cap Cover Gasket | 1 |
| 6 | 92.50.19 | Boss Dia 50 Trunnion Pin KTF | 2 |
| 7 | MB5050DU | BUSH, GLACIER 50 x 55 x 50 Lng | 2 |
| 8 | MB6060DU | BUSH, GLACIER 60 x 65 x 60 Lng | 2 |
| 9 | BOLT METRIC NYLON M12 | NYLON, HEX HD M12C X 25LG | 3 |
| 10 | BOLT METRIC NYLON M12 | NYLON, HEX HD M12C X 20LG | 2 |
| 11 | WASHER NYLON FLAT METRIC-(M8) | WASHER, NYLON FLAT M8 | 6 |
| 12 | WASHER NYLON FLAT METRIC-(M12) | WASHER, NYLON FLAT M12 | 5 |
| 13 | NYLON SCREW CSK HD M10 - 25 | NYLON, CSK SCREW M10X25 | 1 |
| 14 | M12X30 BOLT ZINC | BOLT, HEX HD M12C X 30LG | 12 |
| 15 | WASHER FLAT METRIC-(M12) | WASHER, FLAT M12 | 12 |
| 16 | 269A16 | Clipsal Flexible Conduit Terminator 269A16 | 1 |
| 23 | PROXY IG5846 | PROXY SWITCH WITH PLUG | 2 |
| 24 | BOLT METRIC NYLON M8 | NYLON, HEX HD M8C X 20LG | 6 |

Assy #: **07.09.72**

Assy Bracket Basket Pivot Rotator 240KTF

| REV. | DESCRIPTION | DATE | BY |
|---|---|---|---|
| A | LIMIT SWITCHES & BRACKETS REMOVED | 18/12/2009 | DW |
| B | 08.05.85 REVISED | 14/12/2011 | DW |
| C | 08.05.85 REVISED, ASSEMBLY UPDATED | 12/06/2012 | PLV |

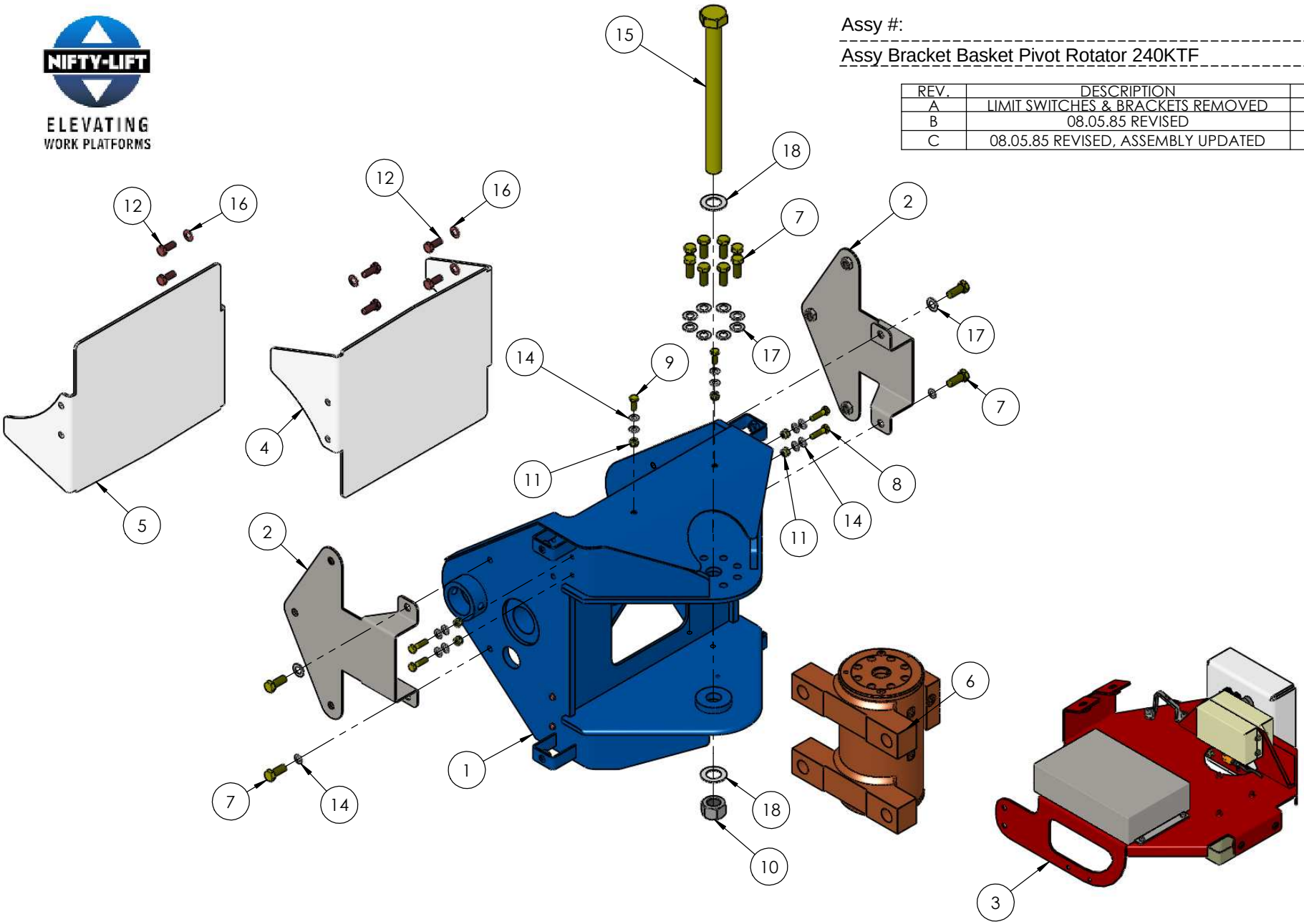

Assy #: **07.09.72**

Assy Bracket Basket Pivot Rotator 240KTF

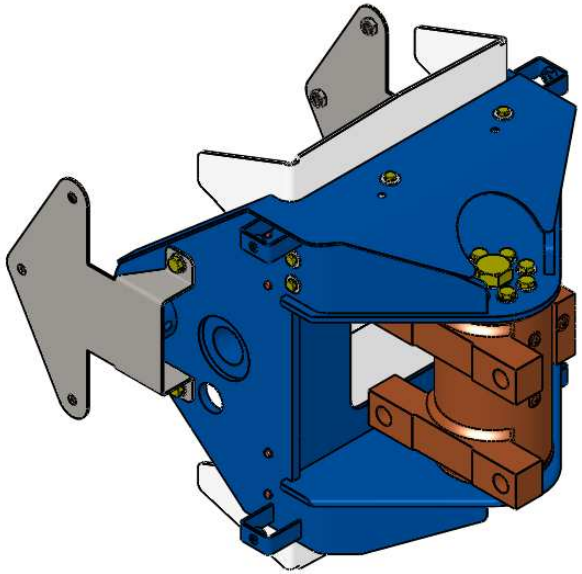

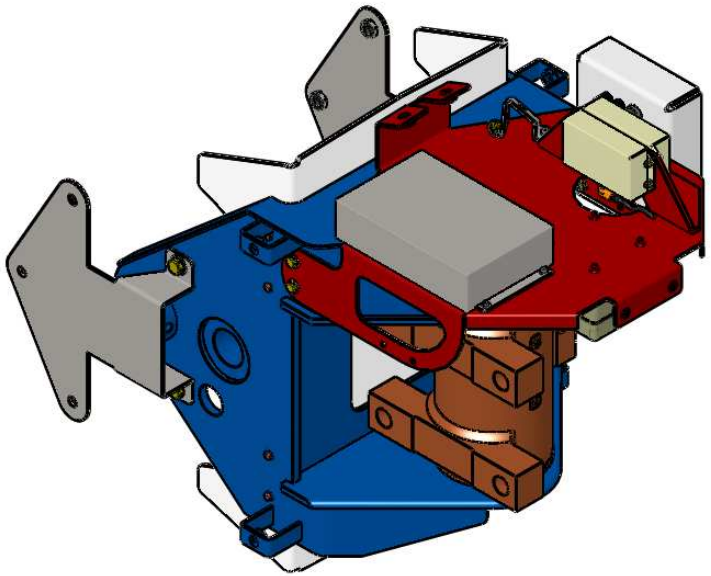

| ITEM | Part_Number | DESCRIPTION | QTY |
|---|---|---|---|
| 1 | 07.09.73 | Weldment Bracket Basket Pivot Rotator 240KTF | 1 |
| 2 | 07.10.49 | Bracket Cover Mnt Basket Pivot 240KTF | 2 |
| 3 | 08.05.85 | Assy Electric Levelling Trim NBB | 1 |
| 4 | 16.06.92 | Cover Basket Pivot Bracket Inner Top KTF | 1 |
| 5 | 16.06.93 | Cover Basket Pivot Bracket Inner Bottom KTF | 1 |
| 6 | 27970 | L20-15M-FT-180-S1-C-H | 1 |
| 7 | 44.10.9M12X30 | BOLT 10.9 HEX ZINC M12X30 | 12 |
| 8 | 44.10.9M08X30 | BOLT 10.9 HEX ZINC M08X30 | 4 |
| 9 | 44.10.9M08X20 | BOLT 10.9 HEX ZINC M08X20 | 2 |
| 10 | NUT CONELOCK 1" CLASS 10 | NUT CONELOCK 1" CLASS 10 | 1 |
| 11 | 49.LNNYM08 | LOCKNUT NYLON INSERT DIN985 M08 | 6 |
| 12 | 46.NYHM10X25 | SCREW NYLON HEX M10X25 | 8 |
| 13 | 91.40.30 | Pin SS Type 431 x 150 Long | 1 |
| 14 | 48.MSZM08 | WASHER MS FLAT ZINC M08 | 14 |
| 15 | 44.L9ZH1X12 | BOLT L9 HI TENSILE HEX ZINC 1X12 | 1 |
| 16 | 48.NYM10X20 | WASHER NYLON FLAT M10X20 | 8 |
| 17 | 48.MSZM12 | WASHER MS FLAT ZINC M12 | 10 |
| 18 | WASHER FLAT TENSION L9-(1") | WASHER, FLAT TENSION L9 | 2 |

Assy #: **07.10.23**

Assy Basket KTF 1500 Wide

| REV. | DESCRIPTION | DATE | BY |
|---|---|---|---|
| A | CDDs & HARNESS ATTACHMENT RELOCATED, RADIO REMOTE COVER CHANGED | 10/12/2009 | PLV&DW |
| B | 16.08.20 WAS 16.07.16, 07.1670.04 ADDED | 16/01/2012 | PJ |

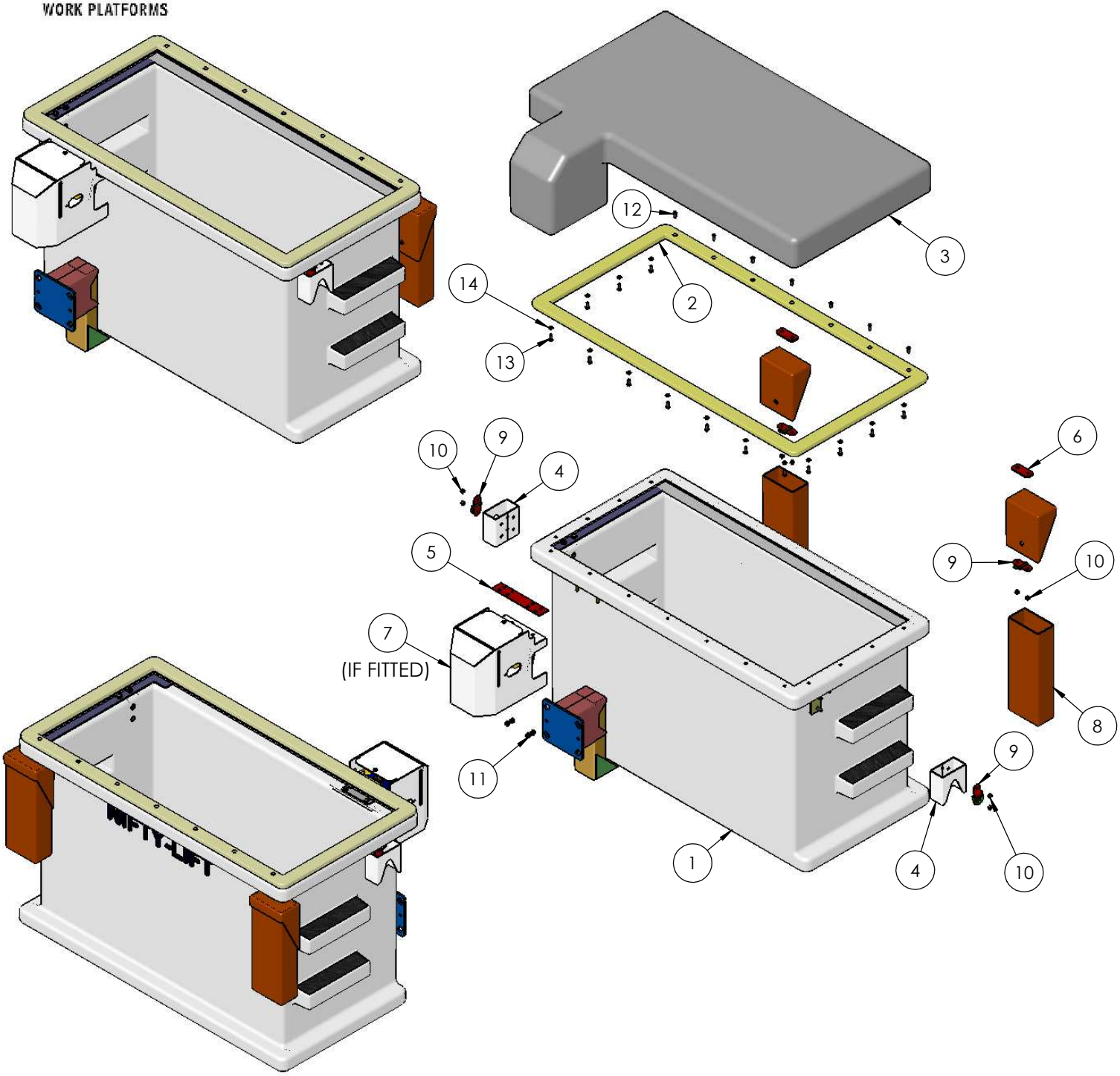


| ITEM | Part Number | DESCRIPTION | Default/QTY |
|---|---|---|---|
| 1 | FG07.10.23 | Fibreglass Basket KTF 1500 Wide | 1 |
| 2 | 07.07.04 | RIM BASKET1670x860 COUNTERSUNK | 1 |
| 3 | 07.1670.04 | Basket Cover Suit 1670 Basket (OPTIONAL SEE TICKSHEET) | 1 |
| 4 | 16.02.17 | COVER HARNESS SADDLE | 2 |
| 5 | 16.05.09 | Radio Remote Basket Controls Cover Urethane Spacer | 1 |
| 6 | 16.05.21 | Urethane Spacer Basket CDD | 2 |
| 7 | 16.08.20 | Assy KTF Radio Remote with Tools | 1 |
| 8 | - | Escapemaster (OPTIONAL SEE TICKSHEET) | 2 |
| 9 | D'Rings&S | Levitator D Rings & Saddles | 4 |
| 10 | M10 | NUT, NYLOC M10C | 8 |
| 11 | M12 | NUT, NYLOC M12C | 4 |
| 12 | NYLON SCREW CSK HD M10 - 25 | NYLON, CSK SCREW M10X25 | 7 |
| 13 | BOLT METRIC NYLON M10 | NYLON, HEX HD M10C X 25LG | 15 |
| 14 | WASHER NYLON FLAT METRIC-(M10) | WASHER, NYLON FLAT M10 | 15 |

16.08.29 NBB

Assy #: **07.10.37**

Assy Basket KTF 1350 Wide

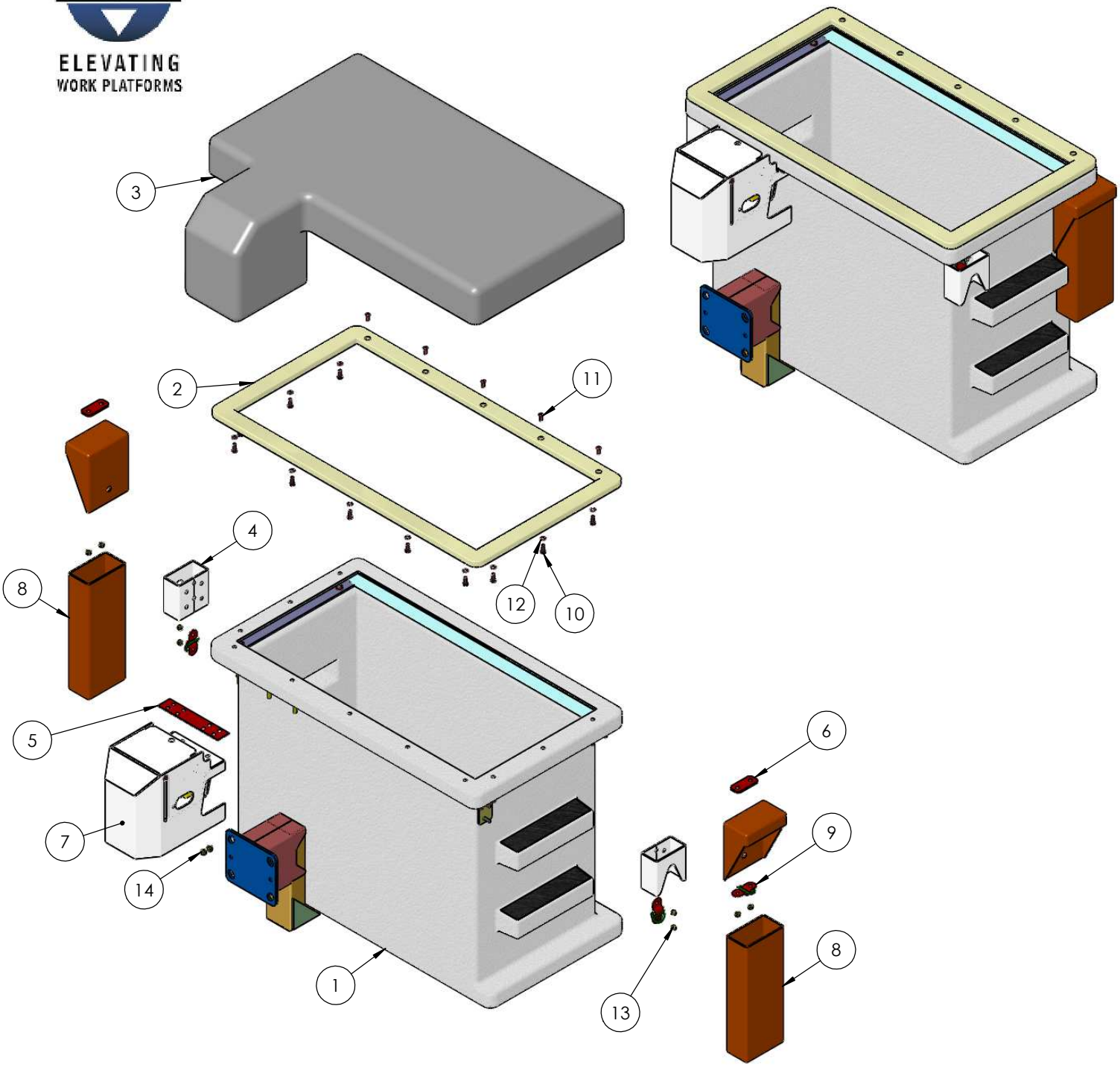


| ITEM | Part_Number | DESCRIPTION | QTY |
|---|---|---|---|
| 1 | FG07.10.37 | Fibreglass Basket KTF 1350 Wide | 1 |
| 2 | 07.07.08 | Basket Rim 1350x750 Countersunk | 1 |
| 3 | 07.1350.03 | Basket Cover Suit 1350 Basket (OPTIONAL SEE TICKSHEET) | 1 |
| 4 | 16.02.17 | COVER HARNESS SADDLE | 2 |
| 5 | 16.05.09 | Radio Remote Basket Controls Cover Urethane Spacer | 1 |
| 6 | 16.05.21 | Urethane Spacer Basket CDD | 3 |
| 7 | 16.08.20 | Assy KTF Radio Remote with Tools (AUTEC)-Use 16.08.29 If NBB | 1 |
| 8 | - | Escapemaster (OPTIONAL SEE TICKSHEET) | 2 |
| 9 | D'Rings&S | Levitator D Rings & Saddles | 3 |
| 10 | 46.NYHM10X25 | SCREW NYLON HEX M10X25 | 11 |
| 11 | 46.NYCM10X25 | SCREW NYLON CSK M10X25 | 5 |
| 12 | 48.NYM10X20 | WASHER NYLON FLAT M10X20 | 11 |
| 13 | 49.LNNYM10 | LOCKNUT NYLON INSERT DIN985 M10 | 8 |
| 14 | 49.LNNYM12 | LOCKNUT NYLON INSERT DIN985 M12 | 4 |

Assy #: **08.05.20**

Assy Basket Levelling 240KTF

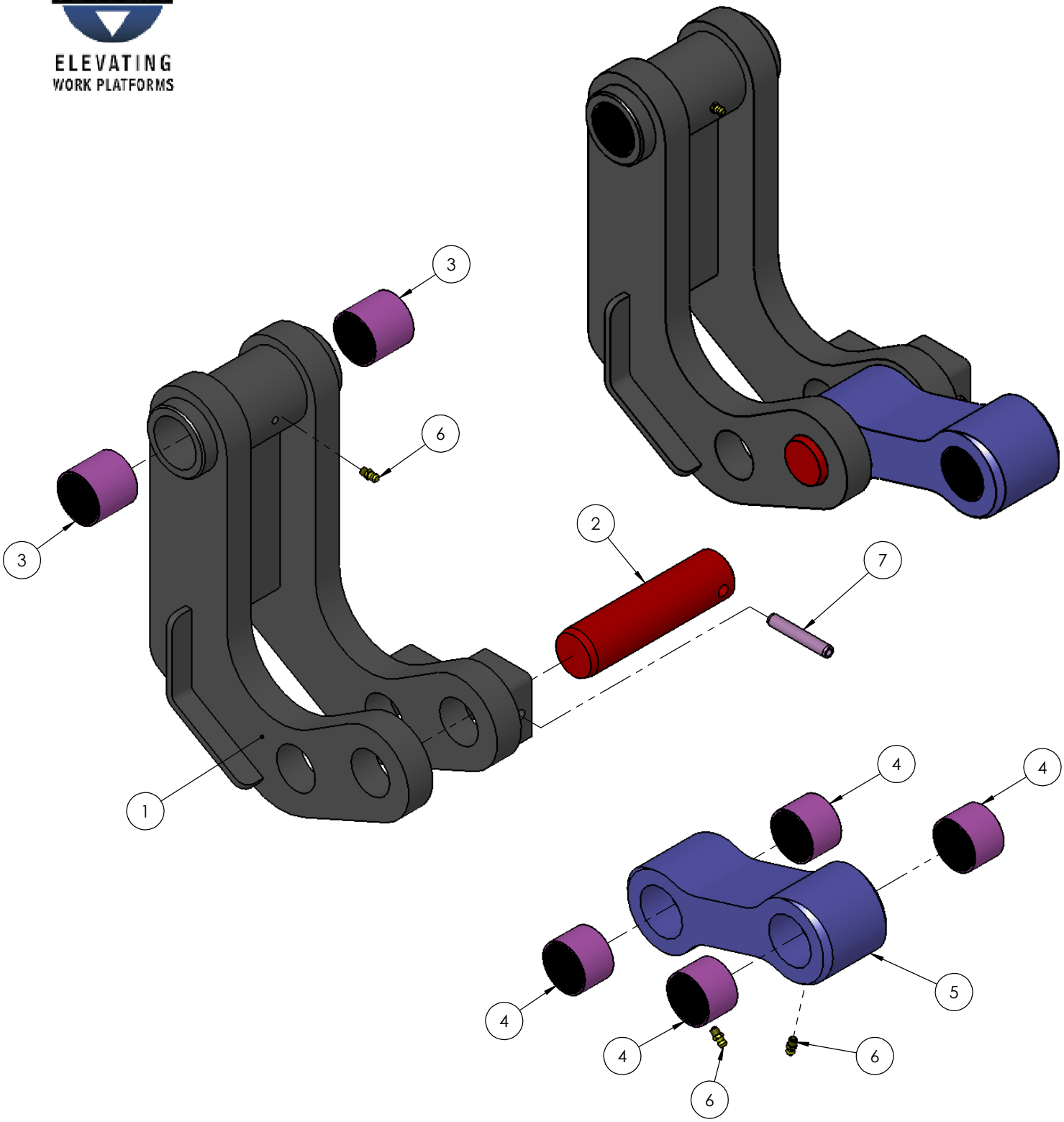


| ITEM | Part Number | DESCRIPTION | QTY |
|---|---|---|---|
| 1 | 08.05.21 | Weldment Idler Basket Levelling 240KTF | 1 |
| 2 | 91.40.30 | Pin SS Type 431 x 150 Long | 1 |
| 3 | MB4040DU | BUSH, GLACIER 40 x 44 x 40 Lng | 2 |
| 4 | MB4030DU | BUSH, GLACIER 40 x 44 x 30 Lng | 4 |
| 5 | LB08.05.36 | Plate Link Basket Levelling 240KTF 40mm | 1 |
| 6 | B38-30 | GREASE NIPPLE, STR M6 X 1.0 | 3 |
| 7 | ROLLPIN, M10 X 60LG | SPRING PIN | 1 |

Assy #: **08.05.26**

Assy Fly Boom Levelling 240KTF

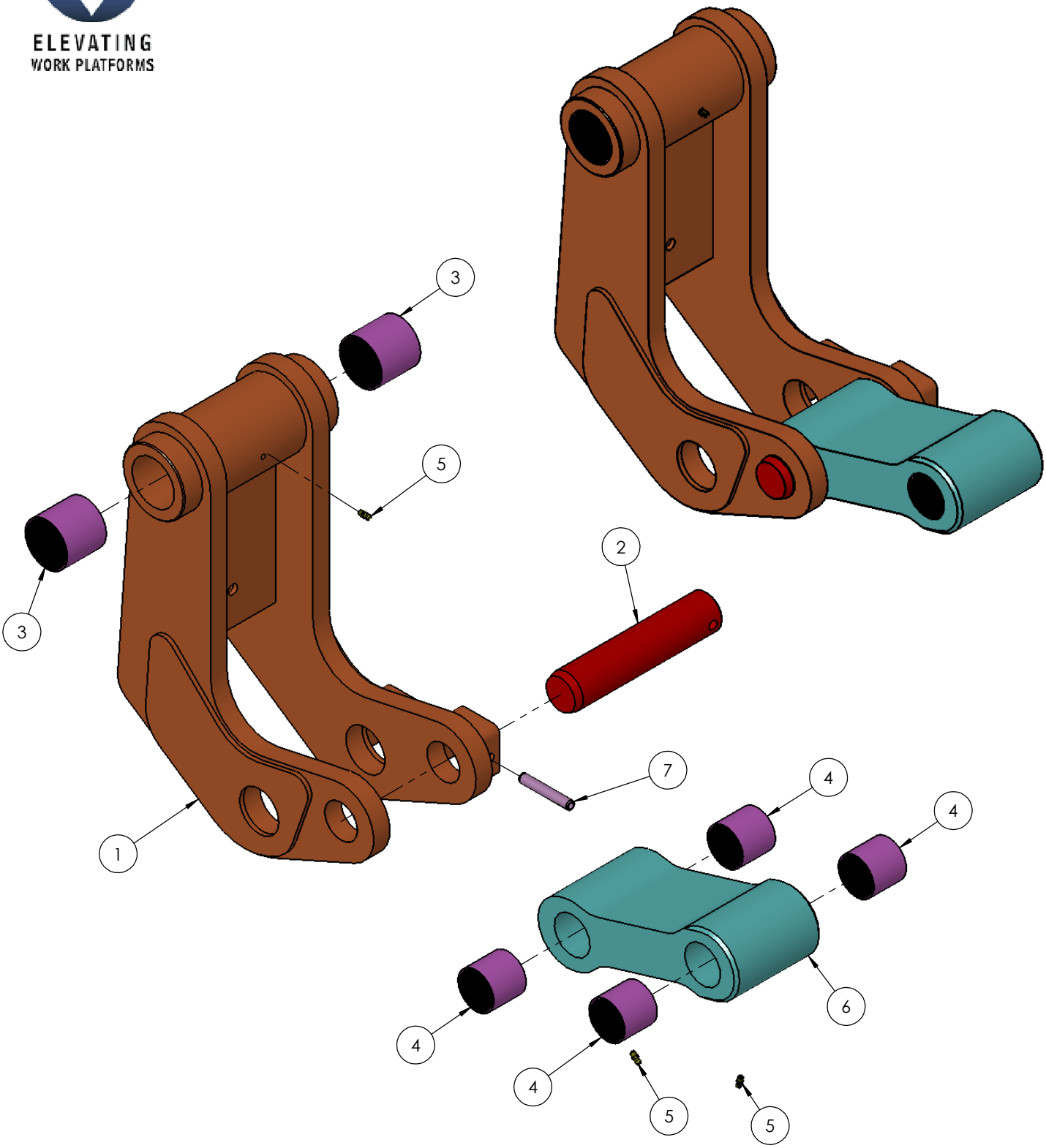


| ITEM | Part_Number | DESCRIPTION | QTY |
|---|---|---|---|
| 1 | 08.05.27 | Weldment Idler Fly Boom Levelling 240KTF | 1 |
| 2 | 91.50.13 | Pin SS Type 431 225 Long | 1 |
| 3 | MB6060DU | BUSH, GLACIER 60 x 65 x 60 Lng | 2 |
| 4 | MB5050DU | BUSH, GLACIER 50 x 55 x 50 Lng | 4 |
| 5 | B38-30 | GREASE NIPPLE, STR M6 X 1.0 | 3 |
| 6 | LB08.05.29 | Plate Link Fly Boom Levelling 240KTF | 1 |
| 7 | ROLLPIN, M12 X 75LG | SPRING PIN | 1 |

Assy #: **08.05.37**

Assy Idler 240KTF

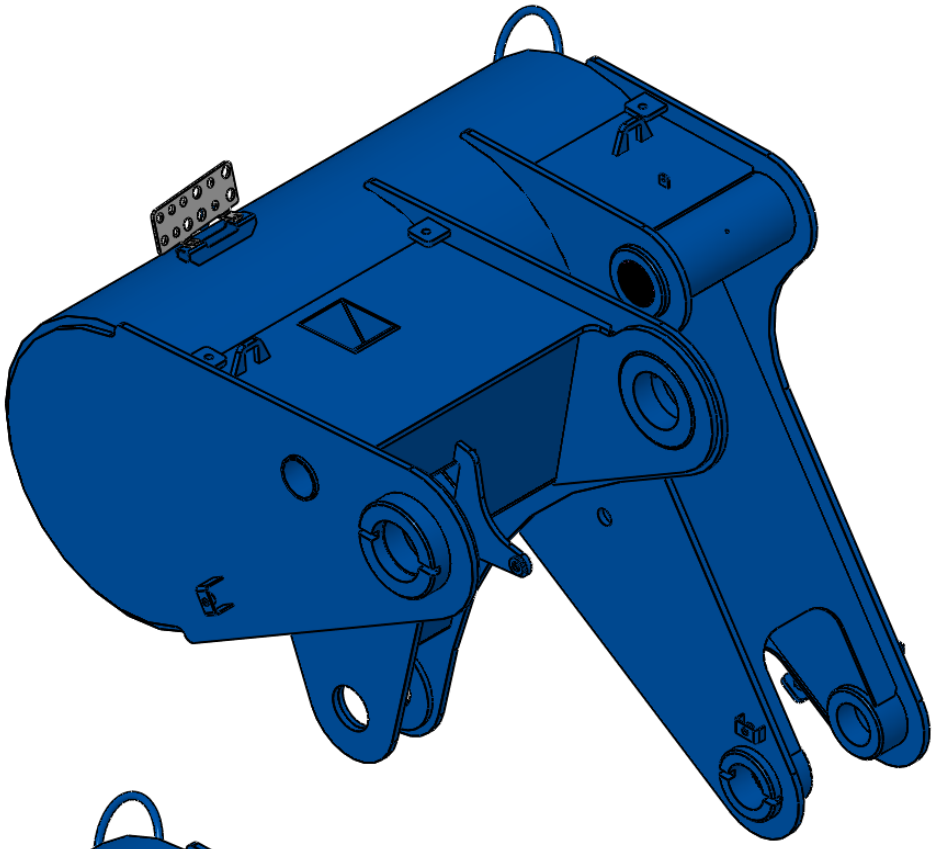

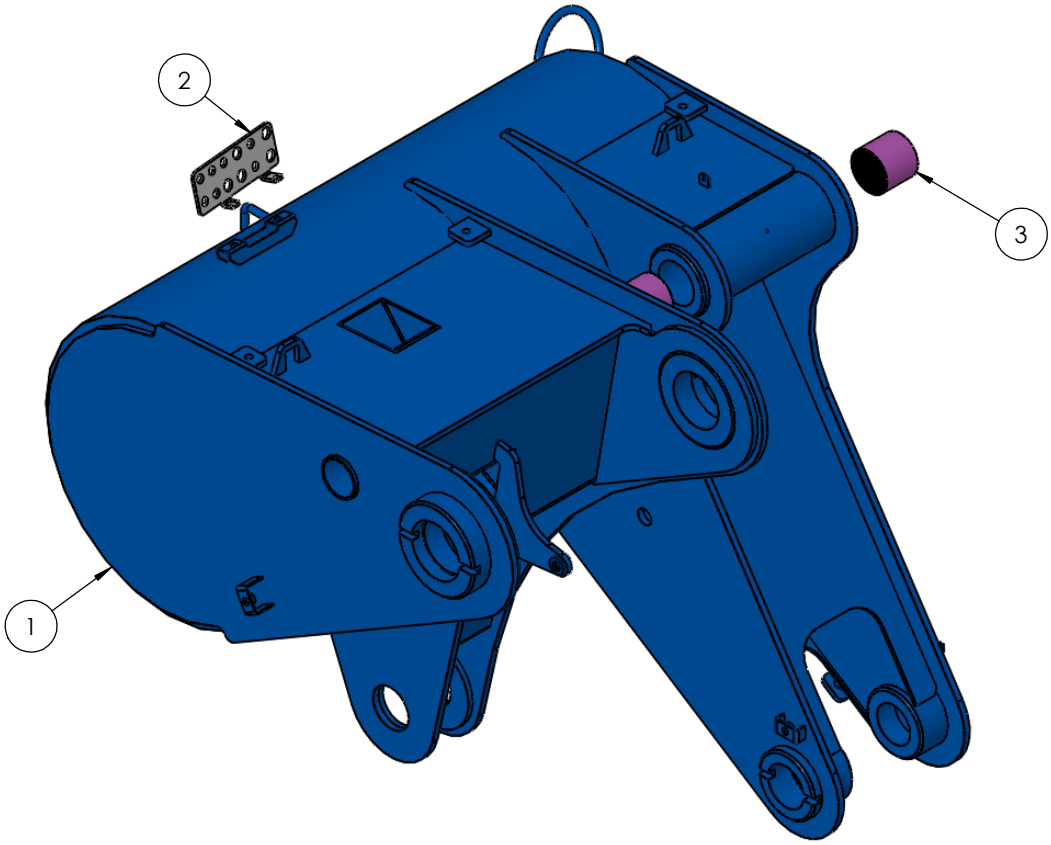


| ITEM | Part_Number | DESCRIPTION | QTY |
|---|---|---|---|
| 1 | 08.05.38 | Weldment Idler 240KTF | 1 |
| 2 | 12.11.65 | IDLER BULKHEAD 240KTF | 1 |
| 3 | MB7570DU | BUSH, GLACIER 75 x 80 x 70 Lng | 2 |

Assy #: **08.06.97**

Assembly Levelling Rod NL240KTF

| ITEM | Part_Number | DESCRIPTION | QTY |
|---|---|---|---|
| 1 | FG08.06.97 | Fibreglass Levelling Rod NL240KTF | 1 |
| 2 | GE80DO-2RS | BEARING, SPHERICAL - 80MM | 2 |

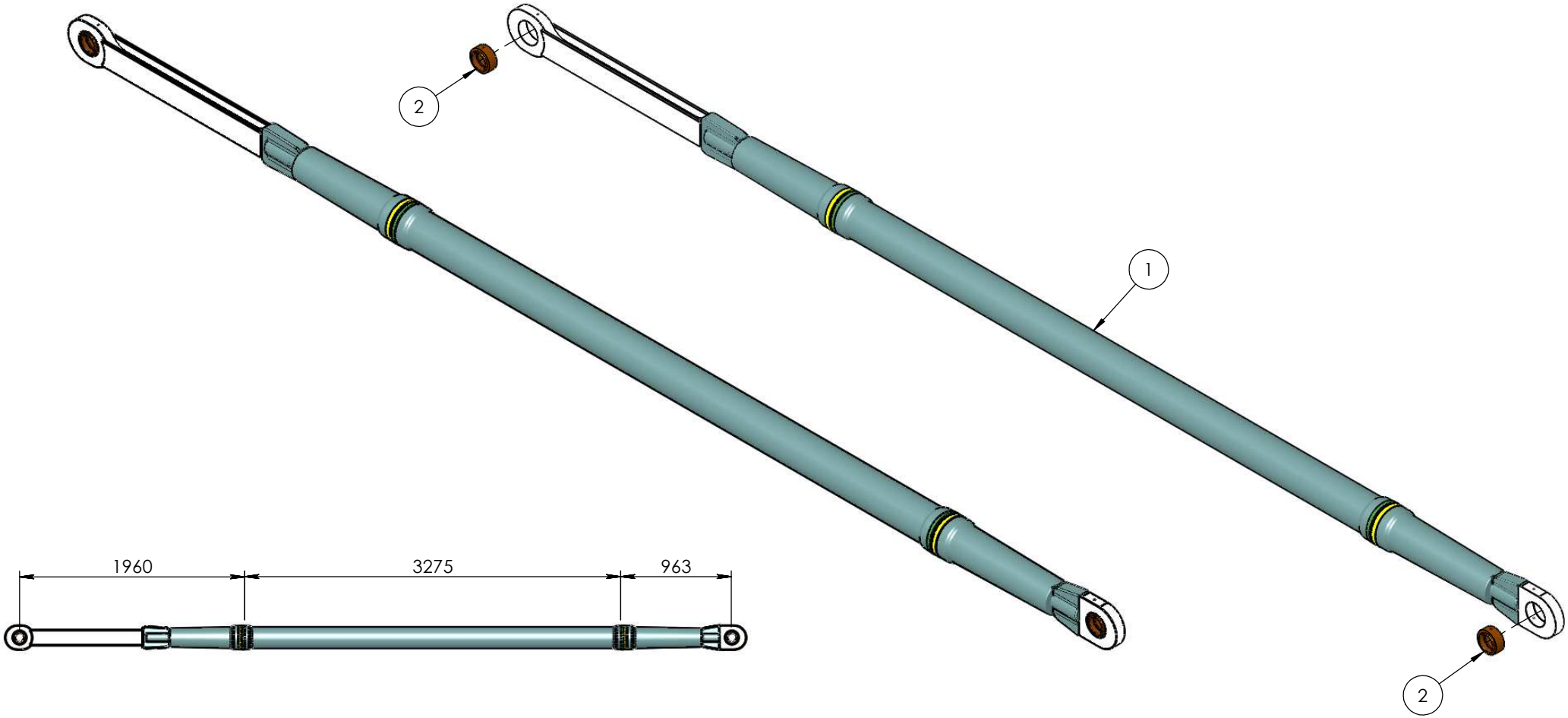

Assy #: **08.05.85**

Assy Electric Levelling Trim Autec

| REV. | DESCRIPTION | DATE | BY |
|---|---|---|---|
| A | REDEISGNED | 18/12/2009 | DW |
| B | CHANGED IMU MOUNTING, NO TRIM | 15/02/2010 | DW |
| C | 08.06.51 REVISED, ADDED NBB VERSION | 12/06/2012 | PLV |

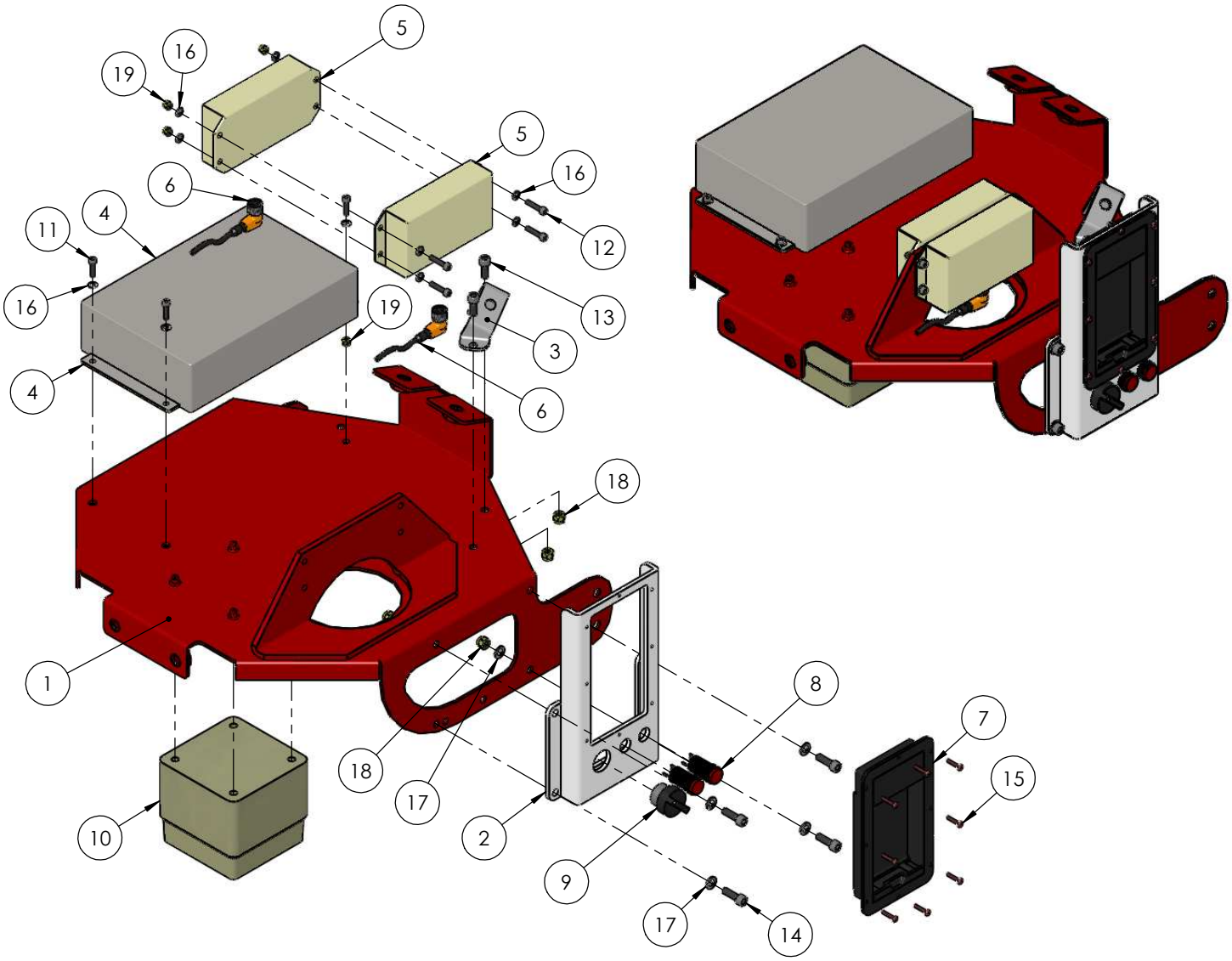


| ITEM | Part_Number | DESCRIPTION | Default/QTY |
|---|---|---|---|
| 1 | 08.06.51 | Weldment Electric Levelling MNT No Trim | 1 |
| 2 | 08.07.03 | Weldt Plastic Autec Battery Holder Mnt KTF Levelling | 1 |
| 3 | 12.10.17 | folding melted bracket | 1 |
| 4 | AUTEC BASKET LEVELLING SYSTEM BOX | Autec Basket Levelling System Box | 1 |
| 5 | IMU | IMU | 2 |
| 6 | PROX PLUG | Proximity Switch Plug | 2 |
| 7 | G0SCAT00P0002 | Autec Battery Housing and Terminal Kit | 1 |
| 8 | LED | LED | 2 |
| 9 | SWITCH | Switch | 1 |
| 10 | JBOX CLIPSAL SINGLE GANG | Junction Box Clipsal Single Gang | 1 |
| 11 | 45.316SSM04X16 | CAP SCREW 316S/S M04X16 | 3 |
| 12 | 45.316SSM04X20 | CAP SCREW 316S/S M04X20 | 4 |
| 13 | 45.316SSM06X16 | CAP SCREW 316S/S M06X16 | 2 |
| 14 | 45.316SSM06X20 | CAP SCREW 316S/S M06X20 | 4 |
| 15 | 46.NYPM03X16 | SCREW NYLON PAN HD M03X16 | 8 |
| 16 | 48.316SSM04 | WASHER 316S/S FLAT M04 | 11 |
| 17 | 48.316SSM06 | WASHER 316S/S FLAT M06 | 8 |
| 18 | 49.LNNYM06 | LOCKNUT NYLON INSERT DIN985 M06 | 6 |
| 19 | 49.LNNYM04 | LOCKNUT NYLON INSERT DIN985 M04 | 5 |

Assy #: **08.05.85**

Assy Electric Levelling Trim NBB

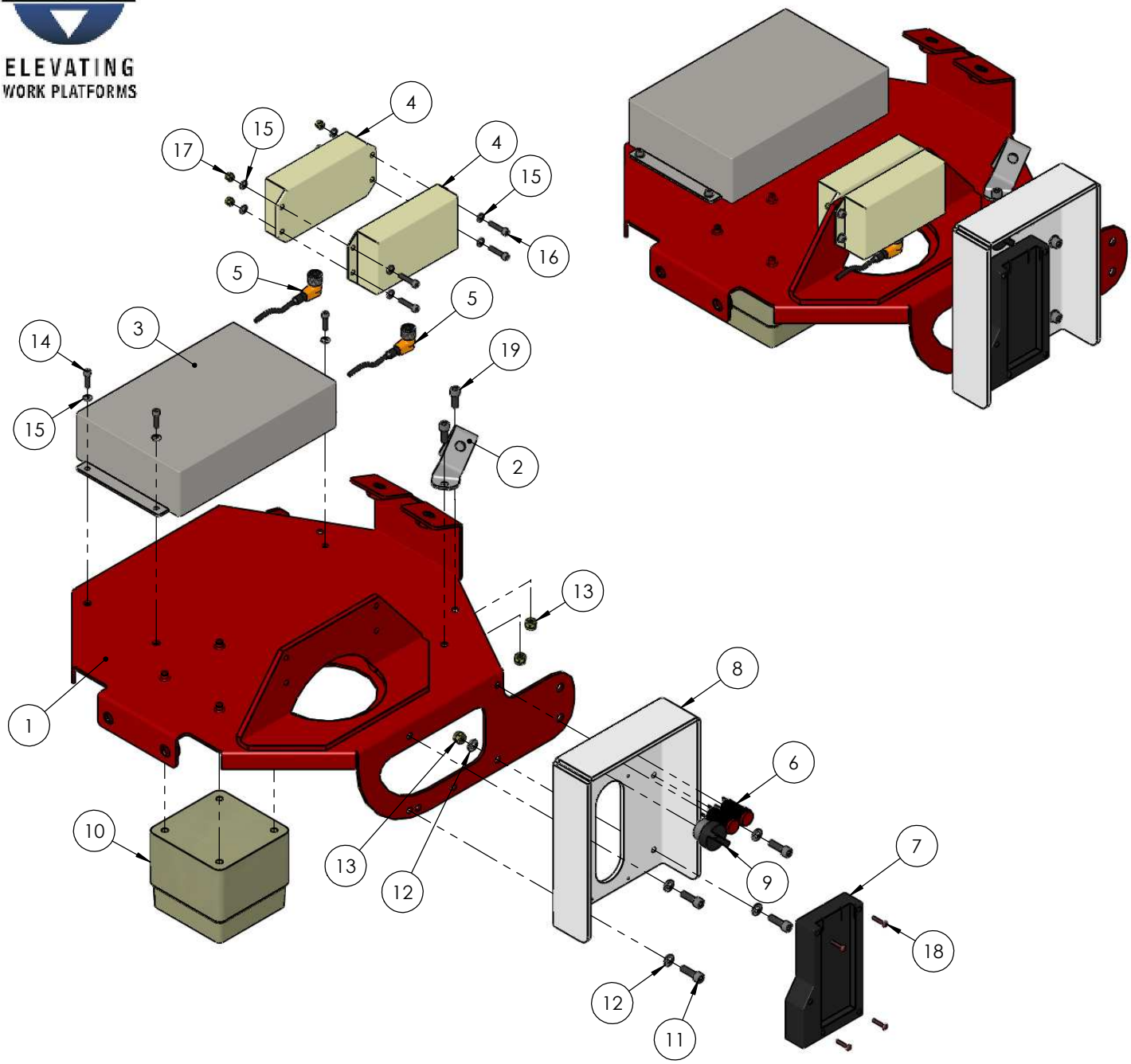


| ITEM | Part_Number | DESCRIPTION | NBB Version/QTY. |
|---|---|---|---|
| 1 | 08.06.51 | Weldment Electric Levelling MNT No Trim | 1 |
| 2 | 12.10.17 | folding melted bracket | 1 |
| 3 | AUTEC BASKET LEVELLING SYSTEM BOX | Autec Basket Levelling System Box | 1 |
| 4 | IMU | IMU | 2 |
| 5 | PROX PLUG | Proximity Switch Plug | 2 |
| 6 | LED | LED | 2 |
| 7 | NBB BATTERY CHARGER | NBB Batery Charger | 1 |
| 8 | 08.06.93 | Plate NBB Battery Mnt KTF Levelling | 1 |
| 9 | SWITCH | Switch | 1 |
| 10 | JBOX CLIPSAL SINGLE GANG | Junction Box Clipsal Single Gang | 1 |
| 11 | 45.316SSM06X20 | CAP SCREW 316S/S M06X20 | 4 |
| 12 | 48.316SSM06 | WASHER 316S/S FLAT M06 | 8 |
| 13 | 49.LNNYM06 | LOCKNUT NYLON INSERT DIN985 M06 | 6 |
| 14 | 45.316SSM04X16 | CAP SCREW 316S/S M04X16 | 3 |
| 15 | 48.316SSM04 | WASHER 316S/S FLAT M04 | 11 |
| 16 | 45.316SSM04X20 | CAP SCREW 316S/S M04X20 | 4 |
| 17 | 49.LNNYM04 | LOCKNUT NYLON INSERT DIN985 M04 | 5 |
| 18 | 46.NYPM03X16 | SCREW NYLON PAN HD M03X16 | 4 |
| 19 | 45.316SSM06X16 | CAP SCREW 316S/S M06X16 | 2 |

Assy #: **09.06.71**

Assy Base 240KTF

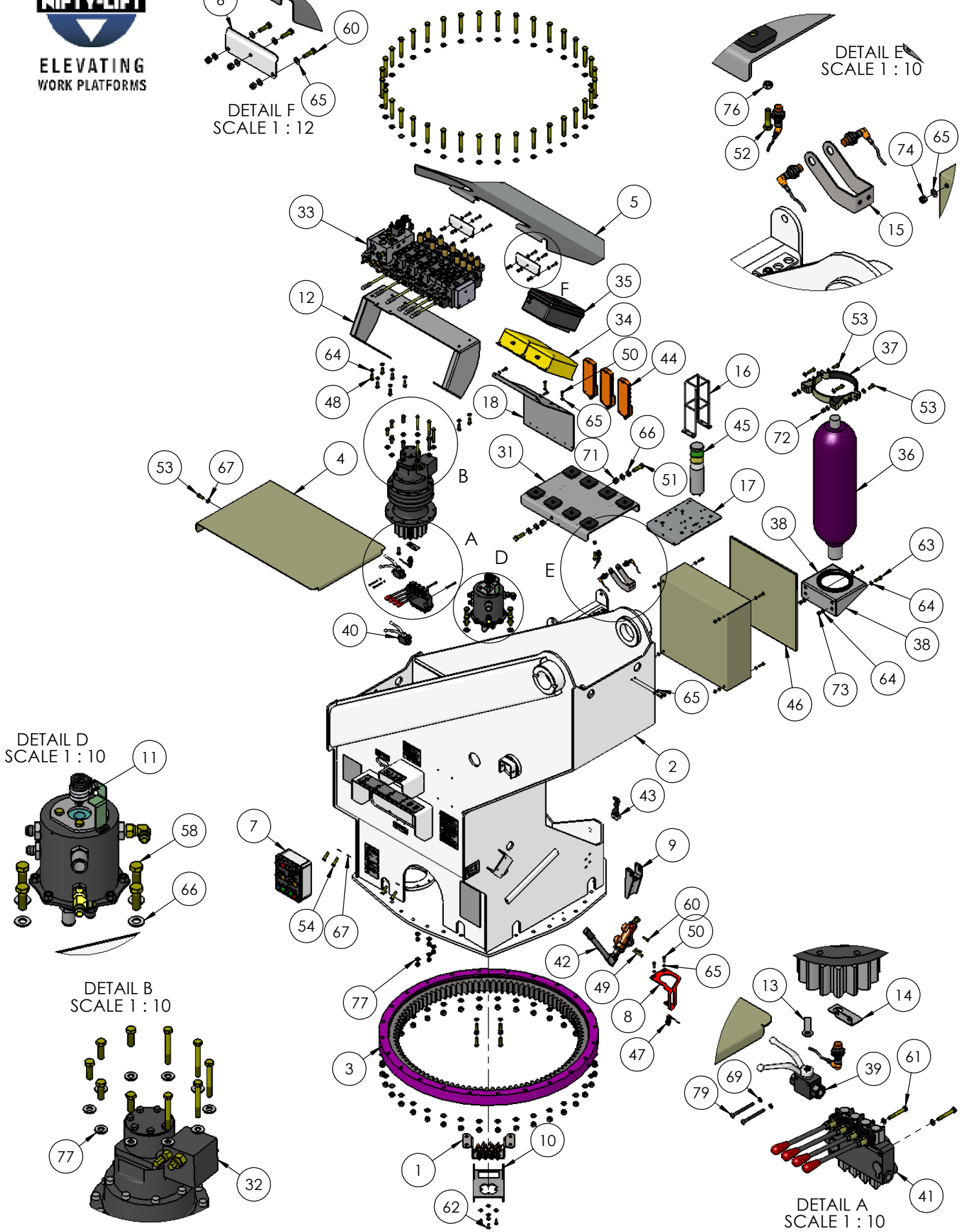

Assy #: **09.06.71**

Assy Base 240KTF

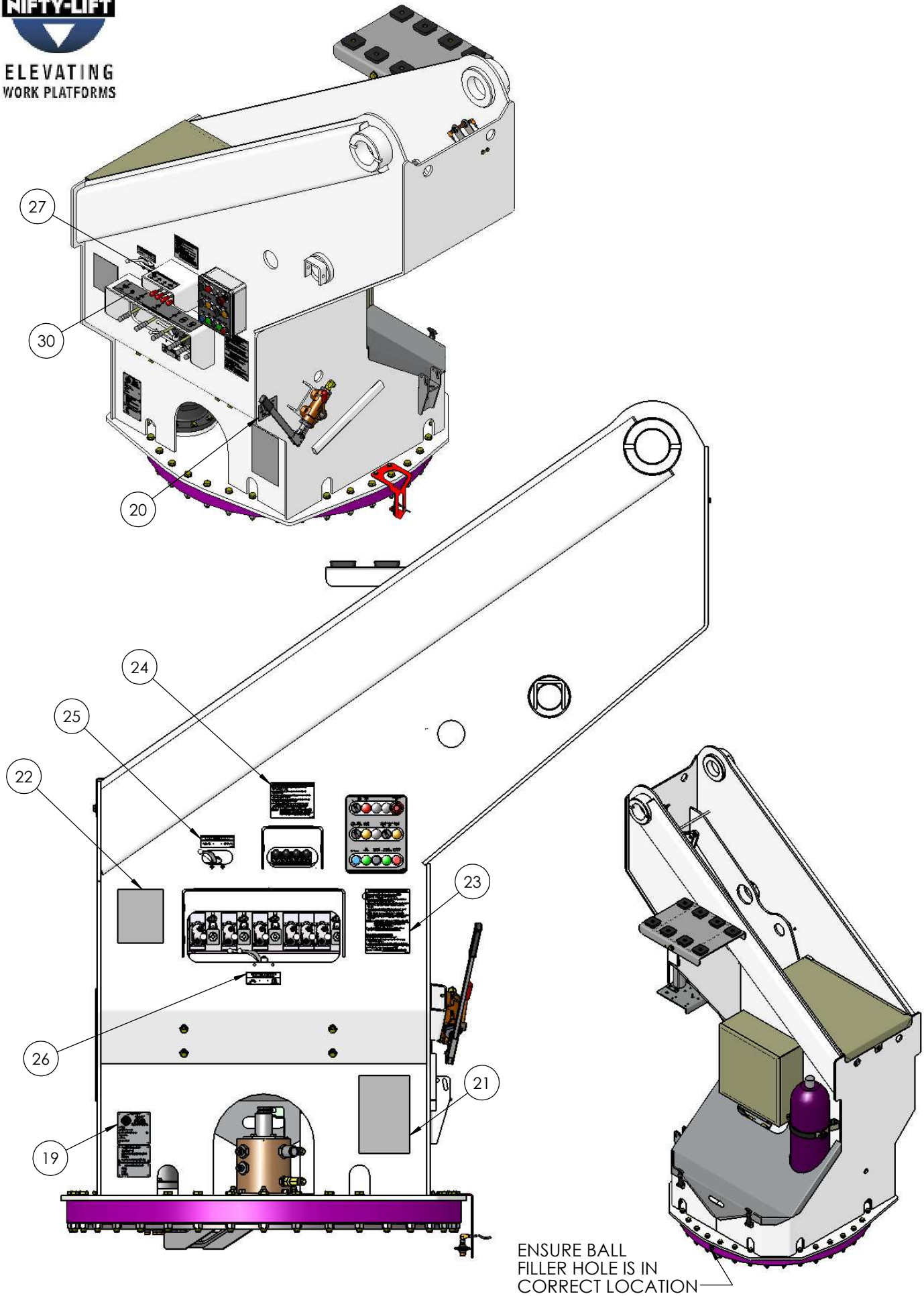

Assy #: **09.06.71**

Assy Base 240KTF

| ITEM | Part_Number | DESCRIPTION | Default/QTY | |
|---|---|---|---|---|
| 1 | 08.05.80 | PROXY SWITCH WITH PLUG | 1 | |
| 2 | 09.06.72 | Weldment Base 240KTF | 1 | |
| 3 | 09.06.67 | Assy Slew Ring 1170 | 1 | |
| 4 | 09.06.85 | Cover Base Controls Slide Cover 240KTF | 1 | |
| 5 | 09.07.02 | Folding Cover Base 240KTF | 1 | |
| 6 | 09.07.03 | Folding Base Cover Mnt 240 | 2 | |
| 7 | 09.07.71 | Assy Base Controls 170-190KTF IDEC Boxes | 1 | |
| 8 | 09.07.99 | Folding Slew Pointer 170-190KTF With Proxy | 1 | |
| 9 | 09.08.61 | Folding Top Boom Tie Down Base Mnted | 1 | |
| 10 | 12.09.66 | Folding 240 Reaction Arm | 1 | |
| 11 | 12.10.07-CANBUS | Assy Hydraulic Slew Coupling 3 Ring - UNO 4" CANBUS | 1 | |
| 12 | 12.11.59 | Folding M4-12 Mont 240KTF 11 Slices With Priority Flow | 1 | |
| 13 | 13.10.50 | Plate Ball Valve Monitor | 1 | |
| 14 | 13.10.51 | FOLDING BALL VALVE SWITCH | 1 | |
| 15 | 13.10.52 | Folding Prox Mnt 240 Bottom Bom Angle | 1 | |
| 16 | 13.11.43 | Light Stack Guard 3 Colours Integral | 1 | |
| 17 | 13.12.42 | Folding Light Stack And Strobe Mnt Endeavour | 1 | (IF FITTED) |
| 18 | 13.12.43 | FOLDING REMOTE AND NODE MNT NL240KTF | 1 | |
| 19 | 14.05.52 | Sign ID Plate Aluminium | 1 | |
| 20 | 14.06.64 | Sign Hand Pump Diagram Enlarged | 1 | |
| 21 | 14.10.24 | Sign Lube Chart NL240KTF | 1 | |
| 22 | 14.10.25 | Sign Flight Envelope NL240KTF | 1 | |
| 23 | 14.10.27 | Sign Emergency Hand Pump Operation KTF | 4 | |
| 24 | 14.10.28 | Sign Manual Basket Levelling Operation KTF | 1 | |
| 25 | 14.10.29 | Sign Basket Levelling Ball Valve KTF | 1 | |
| 26 | 14.10.30 | Sign Emergency Hand Pump Ball Valve KTF | 1 | |
| 27 | 14.10.31 | Sign Emergency Bleed Down Controls KTF | 1 | |
| 28 | 14.11.10 | Insulation Rating Sign | 1 | |
| 29 | 14.11.15 | Rated Capacity Sign | 1 | |
| 30 | 14.12.23 | Sign Base Controls 240KTF | 1 | |
| 31 | 15.00.15-RUBBER | Assy Boom Rest Pad 140/170RKT Rubber Blocks | 1 | |
| 32 | RE512TS31MD-30 | REYNOLDS GEARBOX RE512 | 1 | |
| 33 | AS PER CUSTOMER | Rexroth M4-12 Valve CC/RR/170/BTFTeBsS | 1 | (IF FITTED) |
| 34 | Autec PRO-M | Autec Radio Remote Receiver | 2 | (IF FITTED) |
| 35 | RADIO REMOTE RECEIVER NBB | Radio Remote Receiver NBB | 1 | (IF FITTED) |
| 36 | AC2000A-10-34A | Olaer Accumulator 20L 345 Bar | 1 | |
| 37 | 20057104725 | Olaer Accumulator Saddle Clamp 10 to 57L | 1 | |
| 38 | 20109004750 | Olaer Accumulator Support Bracket 10-57L | 1 | |
| 39 | NLR20-0606 | 2 WAY BALL VALVE | 1 | |
| 40 | BK3-38-L | 3 WAY VALVE | 1 | |
| 41 | BM20-4 | BM20 4 Bank DCV Motor Spool | 1 | |
| 42 | 12.PM20.01 | Assembly Hand Pump PM20 To Suit KDT, KST | 1 | |
| 43 | 9027ZP | Rubber Catch Suit 240 Turret Cover | 2 | |
| 44 | CR2033 | Compact Module Metal 8 I/O | 3 | |
| 45 | - | Idec L7 Light Stack 3 Colours | 1 | (IF FITTED) |
| 46 | SAREL 83323 BOX | SAREL CONTROL BOX 400X500X200 | 1 | |
| 47 | PROXY IG5846 | PROXY SWITCH WITH PLUG | 5 | |
| 48 | M10X30 BOLT ZINC | BOLT, HEX HD M10C X 30LG | 8 | |
| 49 | M8X55 BOLT ZINC | BOLT, HEX HD M8C X 55LG | 1 | |
| 50 | M8X25 BOLT ZINC | BOLT, HEX HD M8C X 25LG | 8 | |
| 51 | M16X55 BOLT ZINC | BOLT, HEX HD M16C X 55LG | 2 | |
| 52 | M10X40 BOLT ZINC | BOLT, HEX HD M10C X 40LG | 1 | |
| 53 | M12X30 BOLT ZINC | BOLT, HEX HD M12C X 30LG | 3 | |
| 54 | M12X40 BOLT ZINC | BOLT, HEX HD M12C X 40LG | 6 | |
| 55 | M16X110 BOLT ZINC | BOLT, HEX HD M16C X 110LG | 36 | |
| 56 | M10X80 BOLT ZINC | BOLT, HEX HD M10C X 80LG | 5 | |
| 57 | M12X35 BOLT ZINC | BOLT, HEX HD M12C X 35LG | 5 | |
| 58 | M16X45 BOLT ZINC | BOLT, HEX HD M16C X 45LG | 4 | |
| 59 | M12X45 BOLT ZINC | BOLT, HEX HD M12C X 45LG | 4 | |
| 60 | M8X30 BOLT ZINC | BOLT, HEX HD M8C X 30LG | 12 | |
| 61 | M6X45 BOLT ZINC | BOLT, HEX HD M6C X 45LG | 2 | |
| 62 | M10X20 BOLT ZINC | BOLT, HEX HD M10C X 20LG | 4 | |
| 63 | M10X35 BOLT ZINC | BOLT, HEX HD M10C X 35LG | 2 | |
| 64 | WASHER FLAT METRIC-(M10) | WASHER, FLAT M10 | 16 | |
| 65 | WASHER FLAT METRIC-(M8) | WASHER, FLAT M8 | 28 | |
| 66 | WASHER FLAT METRIC-(M16) | WASHER, FLAT M16 | 8 | |
| 67 | WASHER FLAT METRIC-(M12) | WASHER, FLAT M12 | 17 | |
| 68 | WASHER FLAT METRIC-(M6) | WASHER, FLAT M6 | 3 | |
| 69 | WASHER FLAT METRIC-(M5) | WASHER, FLAT M5 | 2 | |
| 70 | M6 | NUT, NYLOC M6C | 1 | |
| 71 | M16 | NUT, NYLOC M16C | 2 | |
| 72 | M12 | NUT, NYLOC M12C | 9 | |
| 73 | M10 | NUT, NYLOC M10C | 2 | |
| 74 | M8 | NUT, NYLOC M8C | 10 | |
| 75 | NUT-M16-PL | NUT HEX M16C PLAIN | 36 | |
| 76 | NUT-M10-PL | NUT HEX M10C PLAIN | 1 | |
| 77 | WASHER FLAT METRIC-(M12) | WASHER, FLAT M12 HIGH TENSILE | 15 | |
| 78 | WASHER FLAT METRIC-(M16) | WASHER, FLAT M16 HIGH TENSILE | 72 | |
| 79 | SCREW, PN HD CR M5C X 60LG | SCREW, PN HD CR M5C X 60LG | 2 | |

Assy #: **12.10.07-CANBUS**

Assy Hydraulic Slew Coupling 3 Ring - UNO 4" CANBUS

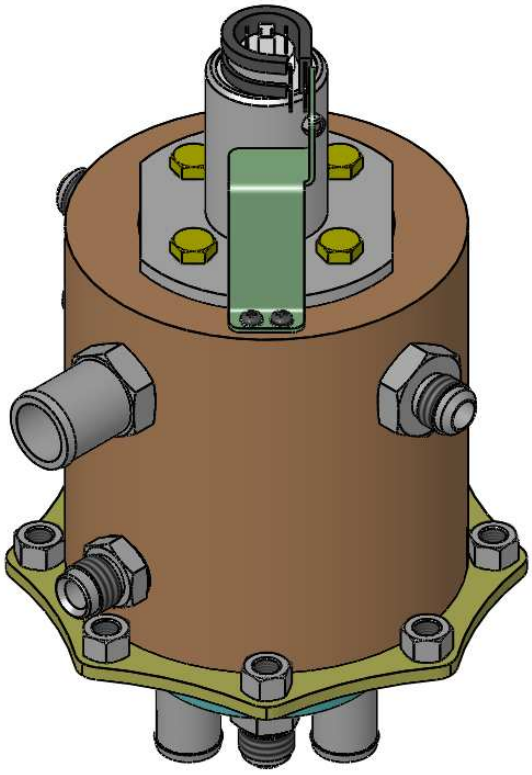

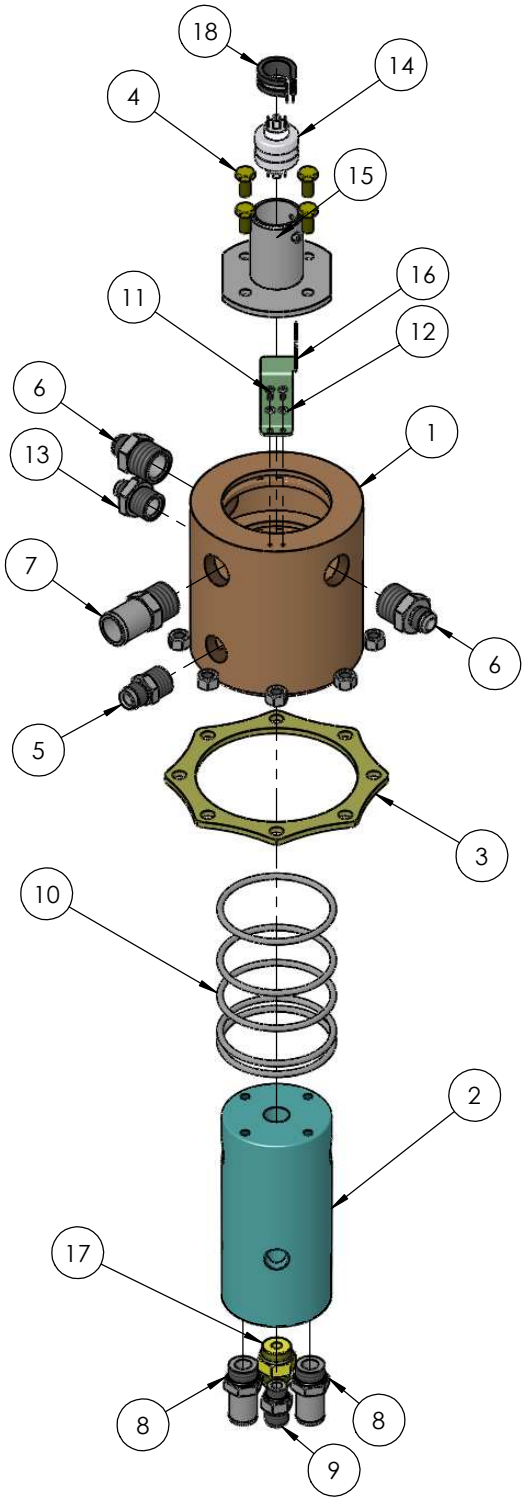


| ITEM | Part_Number | DESCRIPTION | CANBUS 6 RING/QTY. |
|---|---|---|---|
| 1 | 12.02.57 | 3 RING SLEW HOUSING | 1 |
| 2 | 12.10.08 | Hydraulic Slew Coupling Shaft 3 Ring UNO 4" | 1 |
| 3 | 12.02.61 | PLATE SLEW HOUSING FLANGE | 1 |
| 4 | M10X20 BOLT ZINC | BOLT, HEX HD M10C X 20LG | 4 |
| 5 | S7-1214 | BSP-JIC STR ADAPTOR 3/4"-7/8" | 1 |
| 6 | S7-1614 | BSP-JIC STR ADAPTOR 1" BSP-7/8" JIC | 2 |
| 7 | 3301-2016 | SUC/RET COUPLING 1 1/4" HOSE 1" THREAD | 1 |
| 8 | 3320-1617 | SUC/RET COUPLING 1" HOSE 1 1/16 UNO THREAD | 2 |
| 9 | S90-1414 | JIC/UNO STR ADAPTOR 7/8"-7/8" | 1 |
| 10 | BS337.N90 | ORING LARGE SUITS HYD SLEW COUPLING | 5 |
| 11 | SCREW, PN HD CR M4C X 10LG | SCREW, PN HD CR M4C X 10LG | 2 |
| 12 | WASHER FLAT METRIC-(M4) | WASHER, FLAT M4 | 2 |
| 13 | S7-1212 | BSP-JIC STR ADAPTOR 3/4"-3/4" | 1 |
| 14 | A6H | ASIAN TOOL A6H MERCURY SLIP RING | 1 |
| 15 | 12.08.62 | WELDT SLIP RING MNT CANBUS | 1 |
| 16 | 13.09.10 | REACTION ARM CANBUS A6H SLIP RING | 1 |
| 17 | S90-1717 | NIPPLE, 1 1/16 JIC X 1 1/16 UNO | 1 |
| 18 | NARVA P-CLAMP | PS5 | 1 |
| 19 | NUT-M12-PL | NUT HEX M12C PLAIN | 8 |

Assy #: **12.09.69**

Assy Bulkhead Fly Boom Hose Tube 240KTF

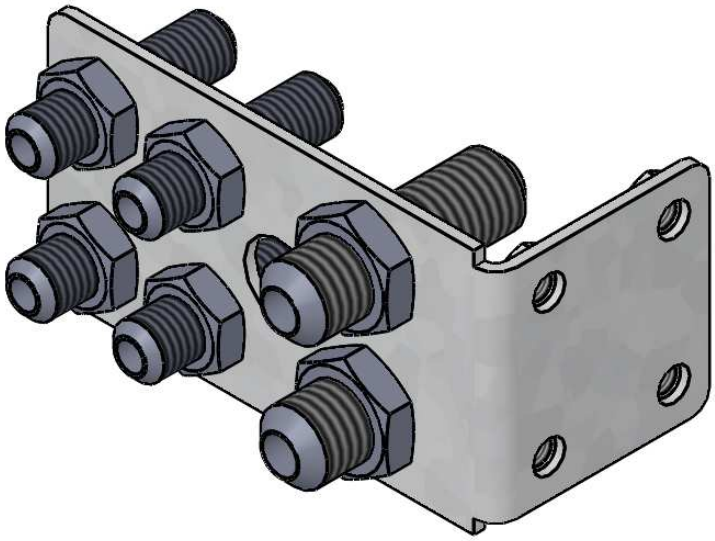

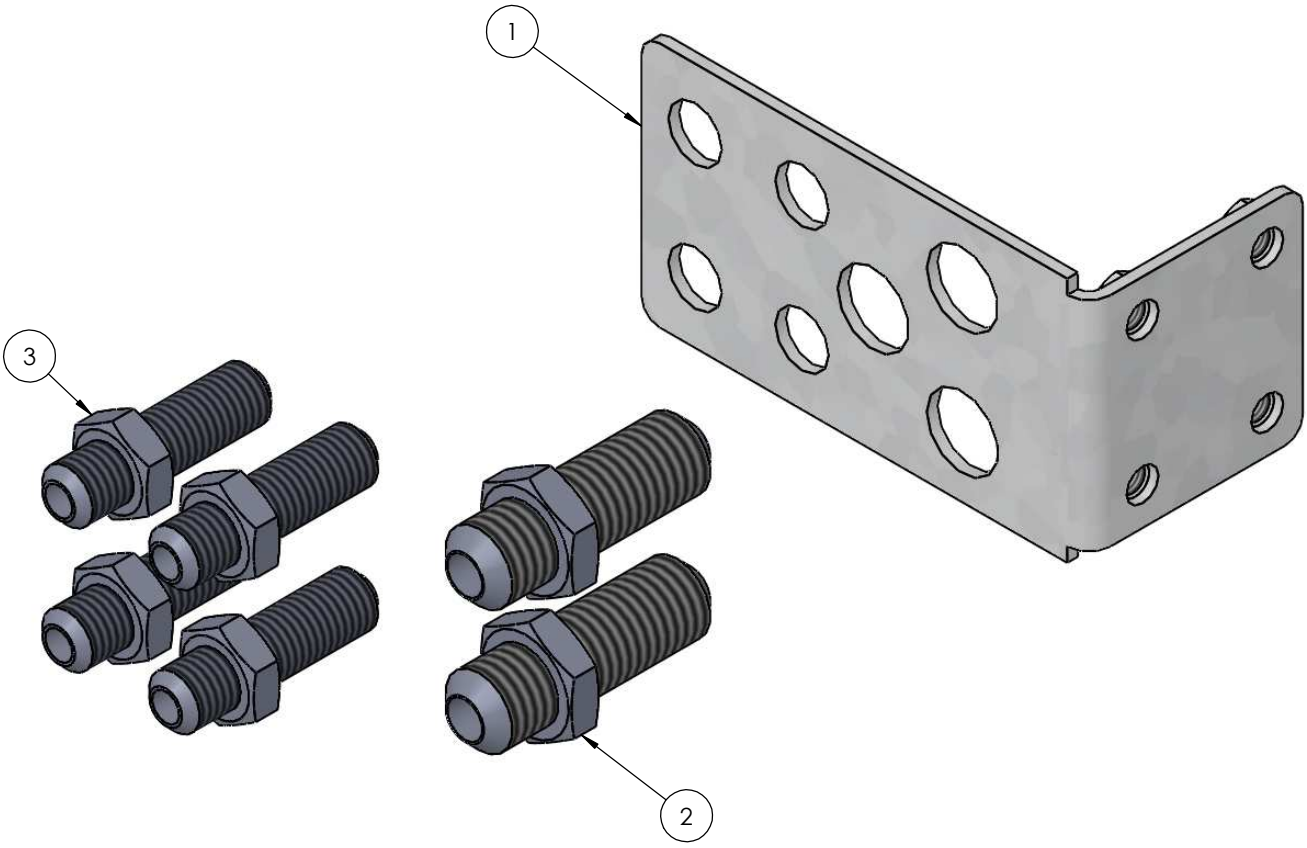


| ITEM | Part_Number | DESCRIPTION | QTY |
|---|---|---|---|
| 1 | RM12.09.69 | Folding Bracket Bulkhead Fly Boom 240KTF | 1 |
| 2 | S10-1212 | BSP-JIC STR ADAPTOR 3/4"-3/4" | 2 |
| 3 | S10-0909 | BSP-JIC STR ADAPTOR 9/16"-9/16" | 4 |

Assy #: **12.09.95**

Assy Bulkhead Bottom Boom 240KTF

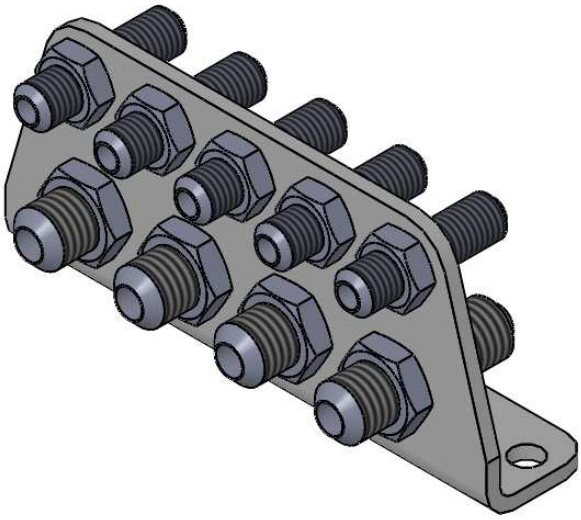

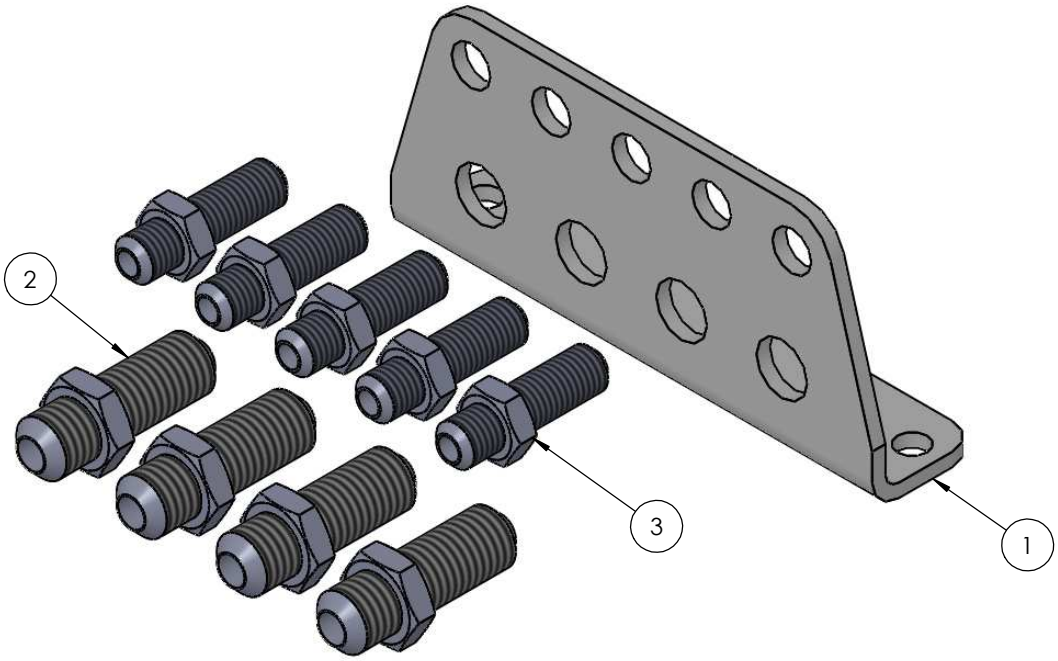


| ITEM | Part_Number | DESCRIPTION | QTY |
|---|---|---|---|
| 1 | RM12.09.95 | Folding Bottom Boom Bulkhead 240KTF | 1 |
| 2 | S10-1212 | BSP-JIC STR ADAPTOR 3/4"-3/4" | 4 |
| 3 | S10-0909 | BSP-JIC STR ADAPTOR 9/16"-9/16" | 5 |

Assy #: **15.00.15-RUBBER**

Assy Boom Rest Pad 140/170RKT Rubber Blocks

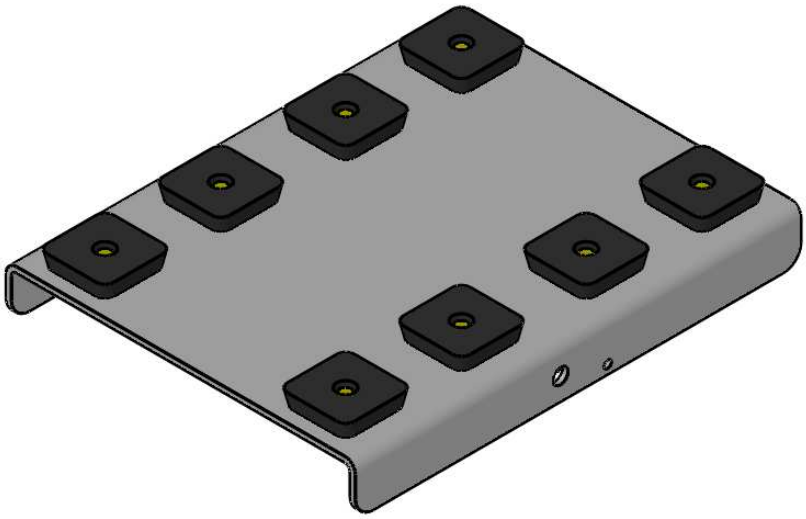

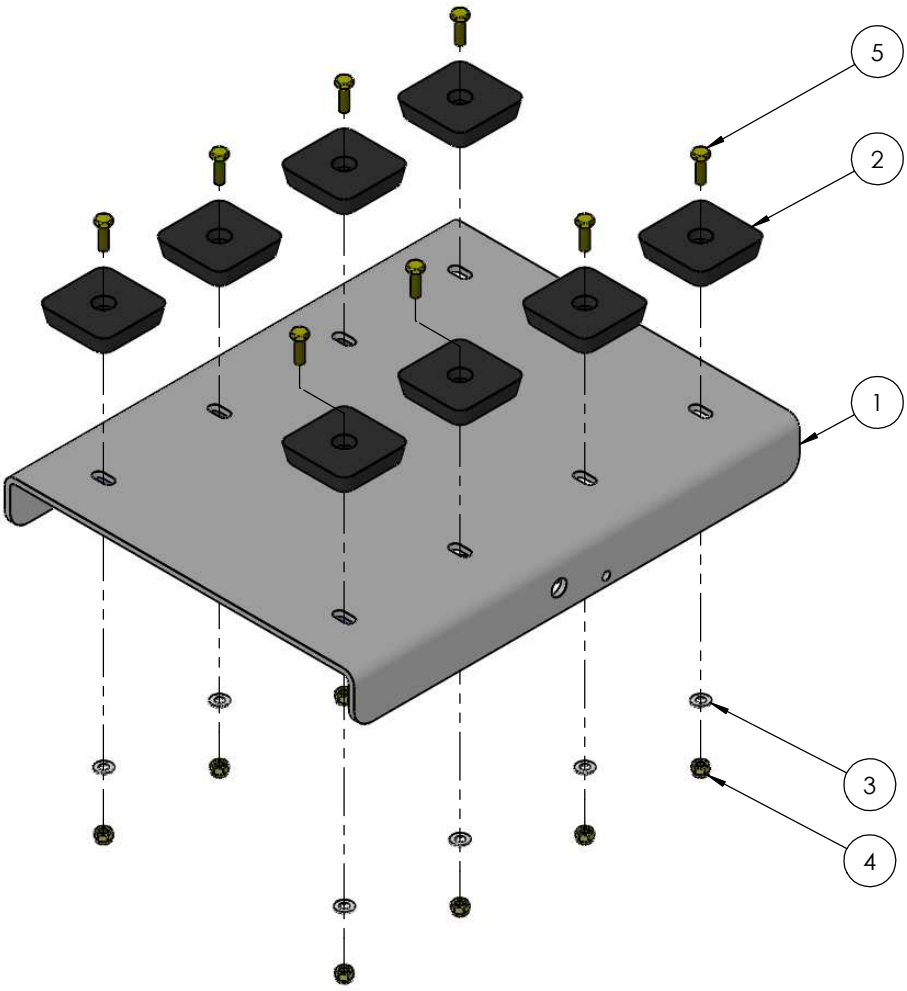


| ITEM | Part Number | DESCRIPTION | QTY |
|---|---|---|---|
| 1 | 15.00.20 | WELDT JIB REST PAD NLRKT | 1 |
| 2 | A809 | TULOP RUBBER BLOCK | 8 |
| 3 | WASHER FLAT METRIC-(M8) | WASHER, FLAT M8 | 8 |
| 4 | M8 | NUT, NYLOC M8C | 8 |
| 5 | M8X25 BOLT ZINC | BOLT, HEX HD M8C X 25LG | 8 |

Assy #: **15.00.15**

Assy Boom Rest Pad 140/170RKT Polyurethane

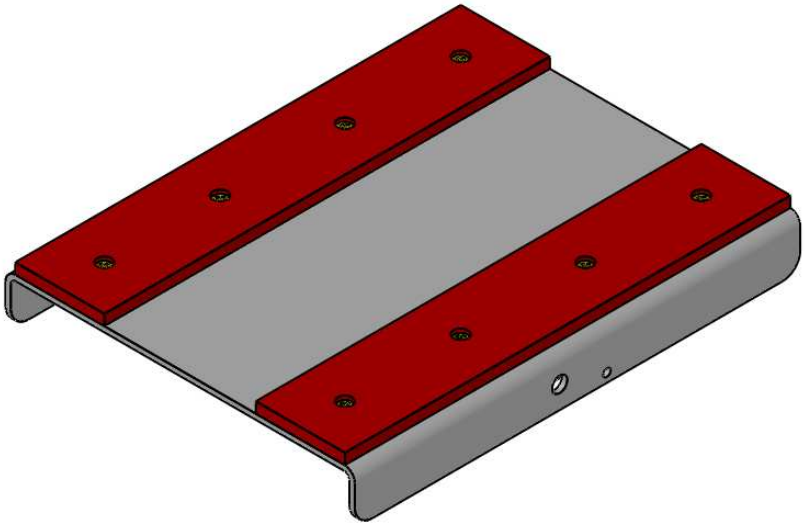

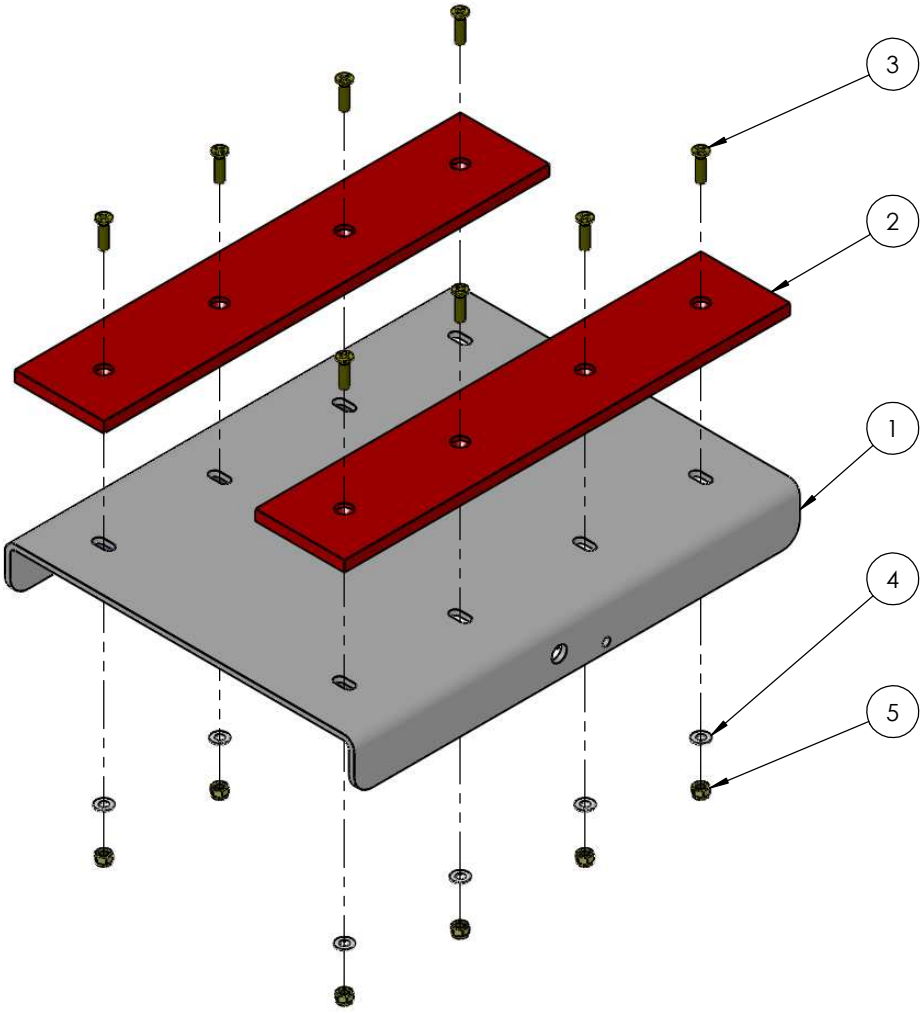


| ITEM | Part Number | DESCRIPTION | QTY |
|---|---|---|---|
| 1 | 15.00.20 | WELDT JIB REST PAD NLRKT | 1 |
| 2 | 16.02.55 | JIB REST URETHANE STRIP 12MM | 2 |
| 3 | M8 X 30 CSK SCREW | SCREW, CSK HD CR M8C X 30LG | 8 |
| 4 | WASHER FLAT METRIC-(M8) | WASHER, FLAT M8 | 8 |
| 5 | M8 | NUT, NYLOC M8C | 9 |

Assy #: **16.06.88**

Assy Insulation Idler 240KTFHV

| REV. | DESCRIPTION | DATE | BY |
|---|---|---|---|
| A | 16.06.66, 16.06.68 & 16.06.89 REVISED | 10/11/2011 | PLV |

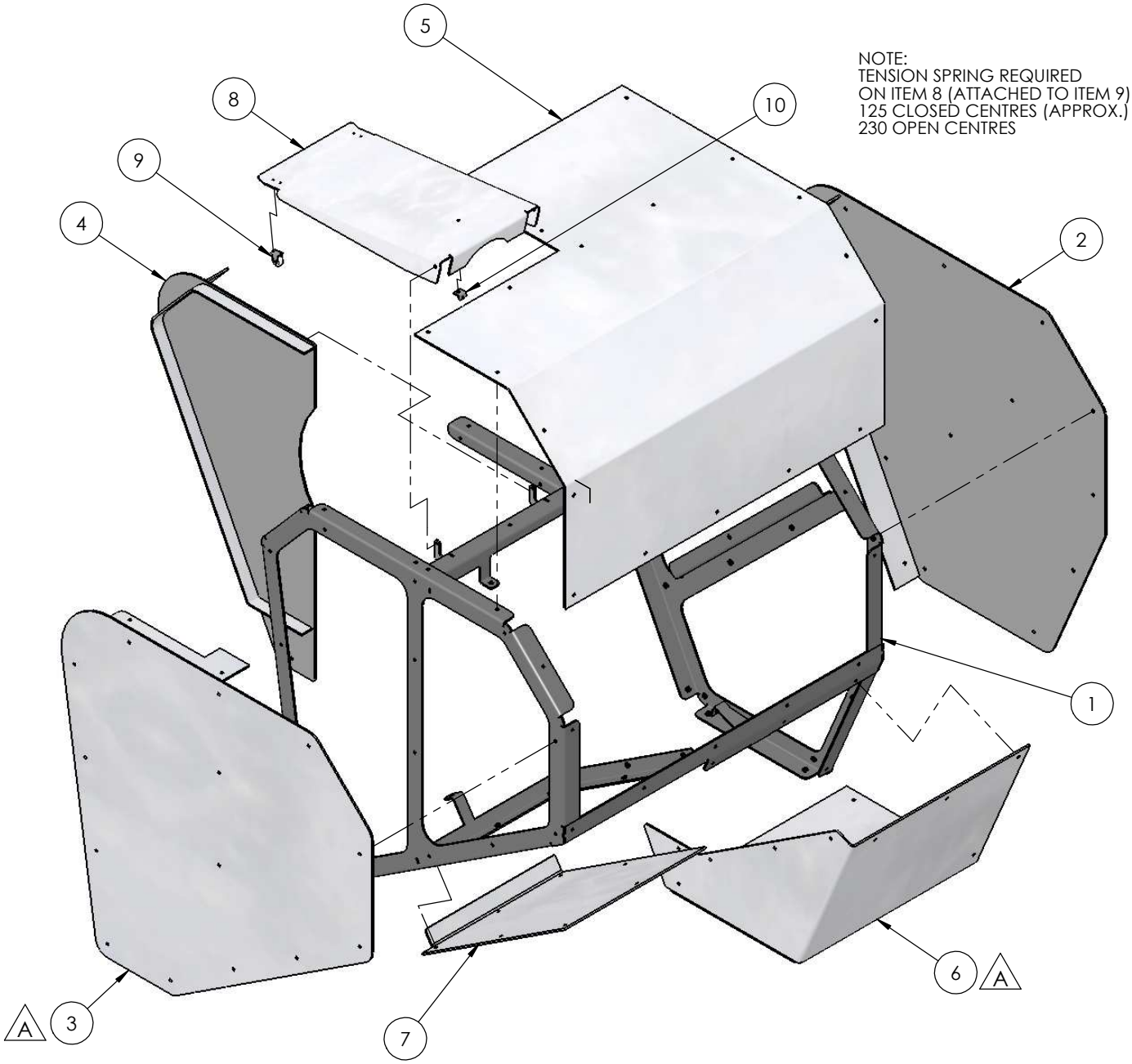


NOTE:
TENSION SPRING REQUIRED
ON ITEM 8 (ATTACHED TO ITEM 9)
125 CLOSED CENTRES (APPROX.)
230 OPEN CENTRES

| ITEM | Part_Number | DESCRIPTION | QTY |
|---|---|---|---|
| 10 | 13.06.40 | Folding Proxy Cover Mnt Top | 1 |
| 9 | Wheel | Small Poly Wheel Roller | 2 |
| 8 | 16.06.70 | Cover Idler Outer Boom Top 240KTF | 1 |
| 7 | 16.06.91 | Cover Idler Rear Inner 240KTF | 1 |
| 6 | 16.06.68 | Cover Idler Rear 240KTF | 1 |
| 5 | 16.06.90 | Cover Idler Upper 240KTF | 1 |
| 4 | 16.06.66 | Cover Idler Mid 240KTF | 1 |
| 3 | 16.06.89 | Cover Idler Outer Boom Side 240KTF | 1 |
| 2 | 16.06.64 | Cover Idler Bottom Boom Side 240KTF | 1 |
| 1 | 08.05.94 | Weldment Idler Cover Mount 240KTF | 1 |

Assy #: **16.06.88**

Assy Insulation Idler 240KTFHV

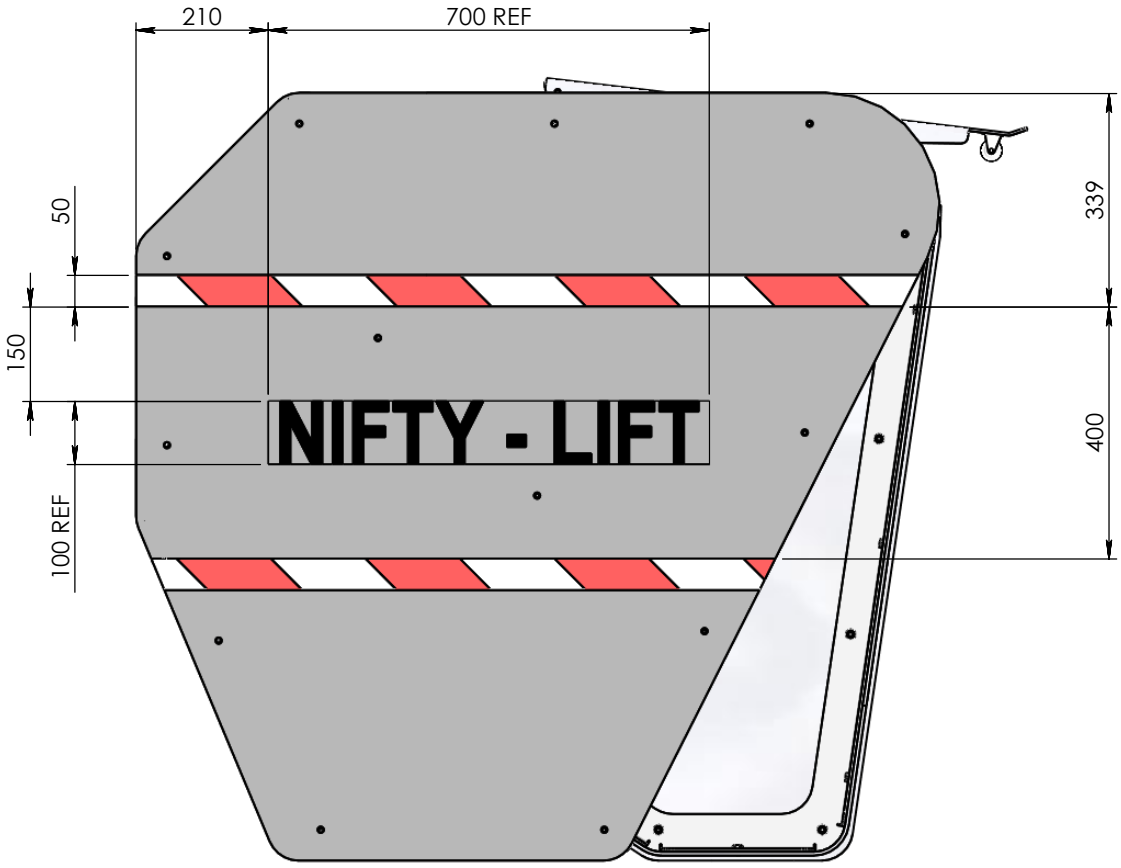


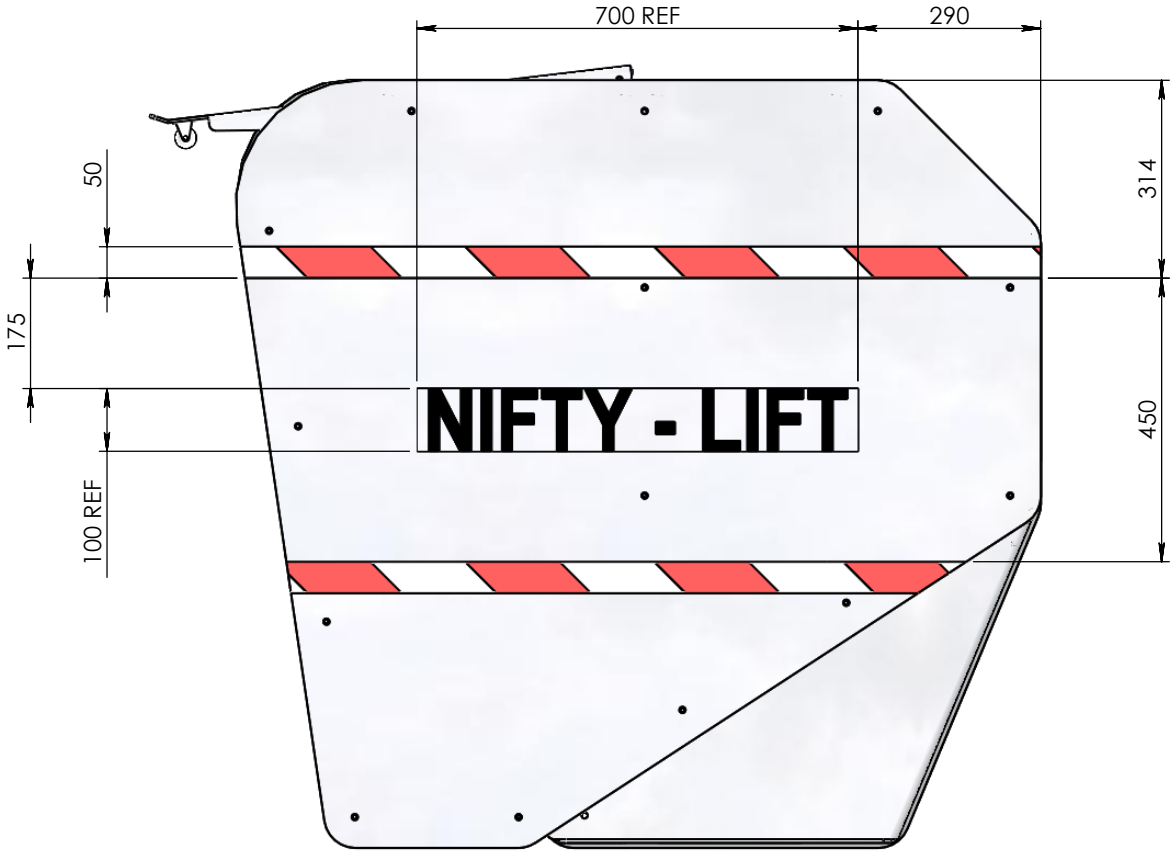

Assy #: **16.07.57**

Assy Cover Fly Boom Hose Tube KTF

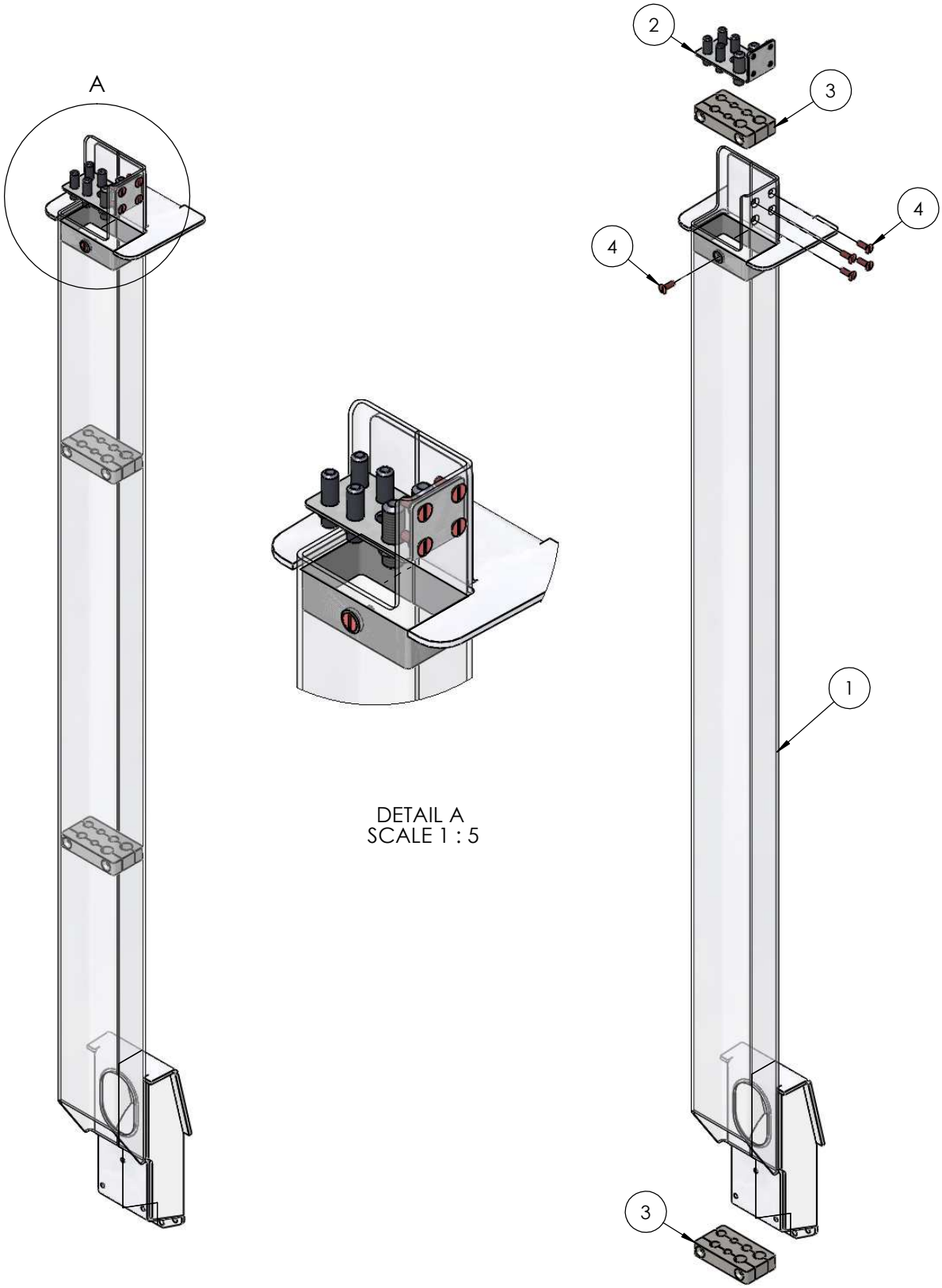


| ITEM | Part_Number | DESCRIPTION | QTY |
|---|---|---|---|
| 1 | 16.07.58 | Cover Fly Boom Hose Tube KTF | 1 |
| 2 | 12.09.69 | Assy Bulkhead Fly Boom Hose Tube 240KTF | 1 |
| 3 | 04.00.48 | Fly Boom Hose Seperator | 2 |
| 4 | NYLON SCREW CSK HD M8 - 25 | NYLON, CSK SCREW M8X25 | 5 |

# autec

## RADIO REMOTE CONTROL

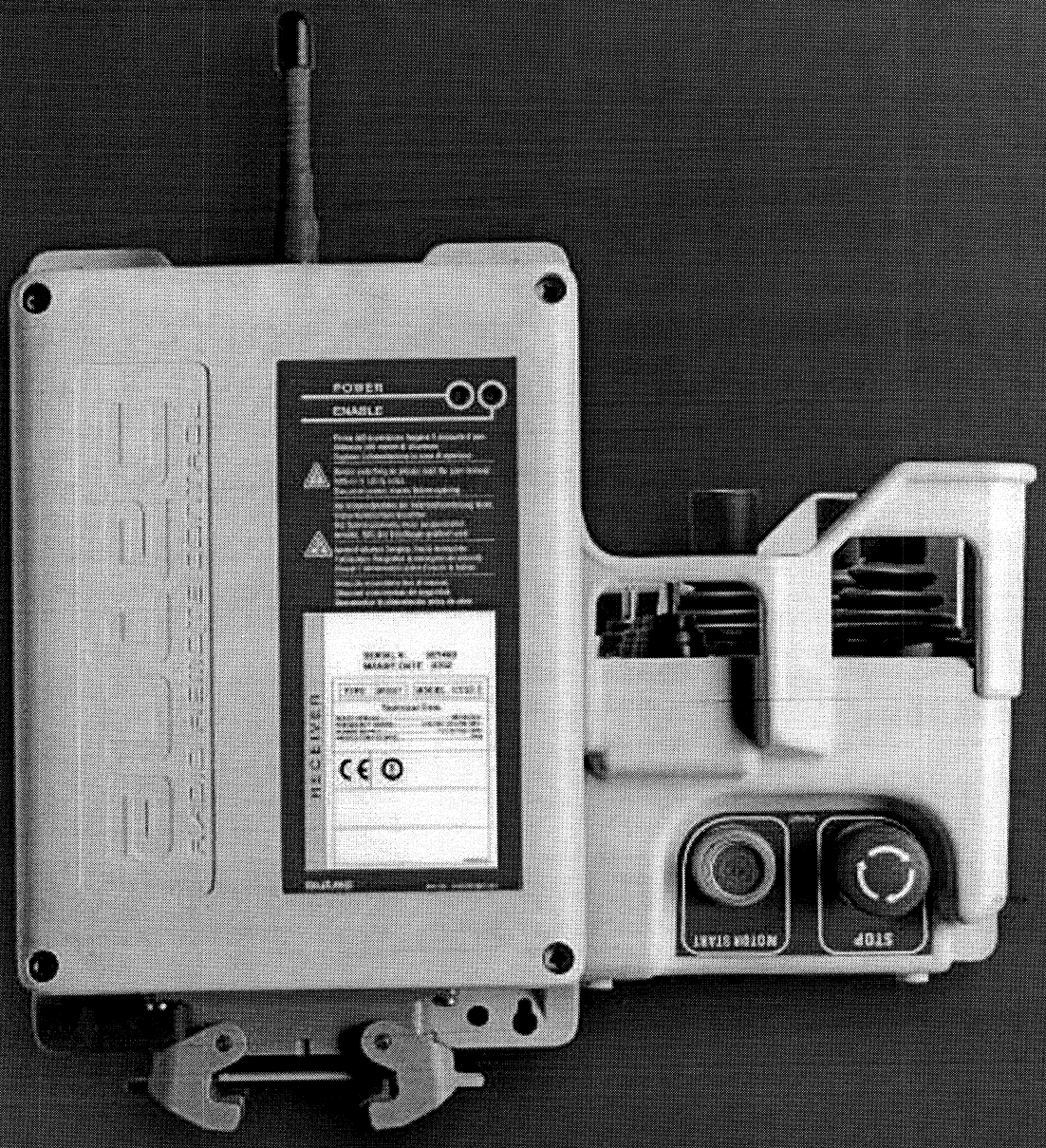


proportional joystick system **PRO-M**

Directive R&TTE (99/05)
(LVD 73/23/EEC + EMC 89/336/EEC)
Machinery Dir. (98/37/EEC) where applicable

## TRANSMITTING UNIT

The PRO-M proportional transmitting unit with proportional command has been specifically designed to safely control hydraulic cranes installed on trucks;
the proportional joysticks provide control of all movements and relevant speed, that can be set with a practical three-position toggle switch according to the type of operation to be carried out.
The minimun and maximun speed of each movement can be set from the transmitting unit by the Remote Set-up function.

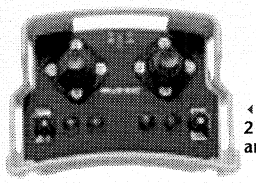

‹ 02 version
2 double axis analogue joysticks

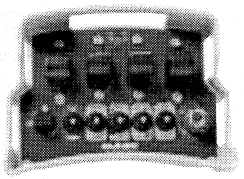

‹ 04 version
4 single axis analogue joysticks

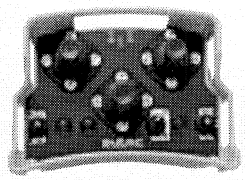

‹ 03 version
3 double axis analogue joysticks

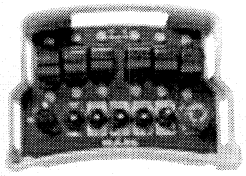

‹ 06 version
single axis analogue joysticks

## RECEIVING UNIT

The PRO-M receiving unit is compact and sturdy, suitable for outdoor applications (protection degree IP65).
Its new design eases installation on mobile equipment (integrated brackets).
State of the art receiver layout allows easy wiring.
Switching power supply: installation of the receiving unit either on 12Vdc or 24Vdc equipments.

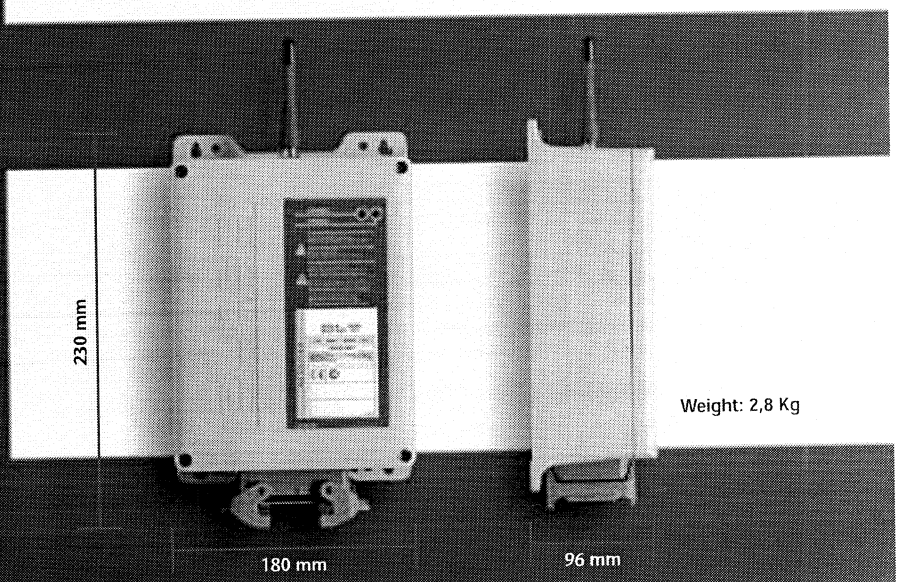


Weight: 2,8 Kg

## HYDRAULIC BANK (option)

The hydraulic bank allows installation of radio remote control on all equipment with no electrical hydraulic distributors.
It's an auxiliary stand alone system fitted with electrical hydraulic actuators, hydraulic pump with oil tank, oil filter and normally-open exhaust electric valve (diagram 1). Designed to be mechanically connected to the manual control rods available on both sides of the truck (diagram 2).

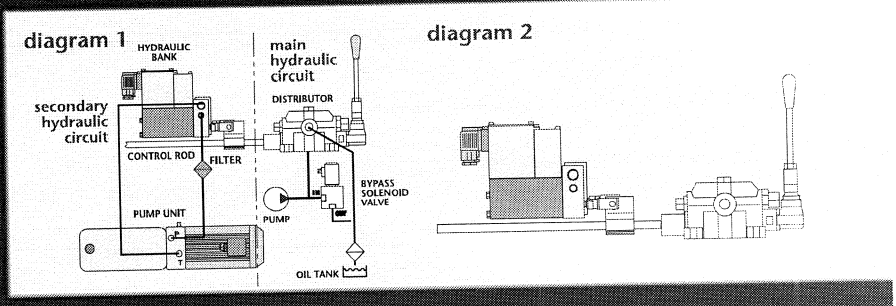


### TECHNICAL DATA

| | |
|---|---|
| Operating frequencies: | |
| Europe | 433.050÷434.790MHz/869.7÷870MHz |
| Other Countries | 450÷480 MHz |
| Operating range | 100 m |
| Channel spacing | 25kHz (optional 12,5 kHz) |
| Hamming distance | ≥8 |
| Probability of undetected error | $<10^{-11}$ |
| Response time to commands | 70÷120 ms |
| Response time to Stop | 70÷120 ms |
| Passive emergency-stop response time | 0.5/1.5 sec |
| Operating temperature range | -20°÷55° C |

| | |
|---|---|
| **Transmitting Unit** | |
| Power Supply | battery pack NiMH 7.2V - 1.3Ah |
| R.F. Power | <10mW 433MHz/<5mW 870MHz |
| Protection degree | IP65 |
| Antenna | internal |
| **Receiving Unit** | |
| Power Supply | 8÷30Vdc (<40W) |
| Protection degree | IP65 |
| Antenna | external stylus |
| Max rating of Stop and Safety relay | 10A (30Vdc) |
| Max rating of movement relays | 4A (30Vdc) |
| Max rating of selection commands relays | 6A (30Vdc) |
| Analogue commands range | 0÷24Vdc (voltage) 0÷2,5A (current) |

autec
RADIO REMOTE CONTROL

Via Pomaroli,9 36030 Caldogno (VI) ITALY
Tel :+39.0444.901000 • Fax:+39.0444.901011
E-mail: info@autec.it • Internet: www.autec.it

Cert. ISO9001 n.501000604
radio remote control design, manufacturing, sales and after-sale service.

# INDEX


| Chapter | | Page |
|---|---|---|
| 1 | CONVENTIONS | 16 |
| 2 | CONFORMITY | 16 |
| 3 | RADIO REMOTE CONTROL DESCRIPTION | 16 |
| 4 | INSTALLATION WARNINGS | 17 |
| 5 | USE WARNINGS | 18 |
| 6 | MAINTENANCE WARNINGS | 19 |
| 7 | TRANSMITTING UNIT AND HOW IT WORKS | 20 |
| 8 | RECEIVING UNIT | 22 |
| 9 | PROPORTIONAL OUTPUT SETTING PROCEDURE | 24 |
| 10 | RADIO FREQUENCIES | 26 |
| 11 | DIAGNOSTIC | 26 |
| 12 | TECHNICAL DATA | 28 |


**This manual is an integral part of C26 PRO series PRO-M radio remote control** and gives the main information necessary for installing, using and carrying out maintenance on the radio remote control.

**All installation, usage and maintenance operations must be carried out exclusively by qualified technicians who are suitably trained in relevant norms and laws.** At least the radio remote control owner, installer, user and the person in charge of its maintenance must therefore read and understand each part of this manual.

**Follow the instructions and warnings given by the machine producer regarding the machine controlled by the radio remote control.**

If this manual is lost or damaged, ask for a copy from Autec. Please specify the serial number of the relative radio remote control.

The information contained in this manual is subject to modification without notice and is not binding. No parts of this manual may be reproduced by any means without the written permission of Autec (including recording and photocopying).

**The following documentation is included in this manual:**
**- EC conformity declaration**
**- guarantee**
**- radio remote control technical data sheet**
**- "Limitations & Authorisation" sheet.**
**Make sure that these documents are present. If they are not, please request them from Autec, specifying the radio remote control serial number.**

## 1 CONVENTIONS

Any pieces of text written in **bold** should be read very carefully.

This symbol highlights extremely important indications and information which, if not observed, can create seriously dangerous situations for people or things.

This symbol highlights all important indications and information that deal with operation.

## 2 CONFORMITY

**The C26 PRO series PRO-M radio remote control is in conformity with the R&TTE 99/05/EC Directive and its essential requirements.** The radio remote control is also in conformity with the norms given in the EC conformity declaration that is included in this manual.

**It should be remembered that in some countries rules which control:**
**- the use and/or possession of a radio remote control;**
**- the use of operational frequencies which have not yet been harmonised in Europe**
**must be respected.**
**See the enclosed "Limitations & Authorisations".**

**PERMITTED APPLICATIONS:**
**Hoisting and moving machines installed exclusively on vehicles that use a battery as electrical power supply source (for example: hydraulic cranes, cement pumps . . .)**

**FORBIDDEN APPLICATIONS**
**-machines installed in areas where equipment with explosion-proof characteristics are being used**
**- AC supplied machines**
**- machines using a DC supply that does not come from a battery**

## 3 RADIO REMOTE CONTROL DESCRIPTION

Industrial radio remote controls are used to command machines from a distance. Each industrial radio remote control is made up of a portable transmitting unit, from which the user can remotely control the machine, and a receiving unit installed on board the machine itself.

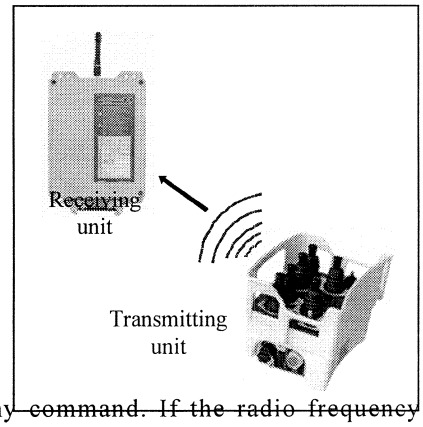


The transmitting unit sends a coded message over radio frequency transmission. This message contains a value called address, which lets the receiving unit decode only the messages coming from its own transmitting unit (the one that has the same address).
This ensures that no interference can activate any command. If the radio frequency transmission is disturbed, incorrect or interrupted, the receiving unit autonomously stops the whole system.

## 4 INSTALLATION WARNINGS

**Installation must only be carried out by qualified people and in accordance with installation country rules. Only a correct installation can ensure the necessary level of safety during subsequent radio remote control use.**

**General indications**

Respect the machine operational characteristics when connecting the Radio remote control. **The safety circuits on the radio remote control and/or present on the machine should not be bypassed (or excluded).**

The receiving unit wiring can be configured very easily, therefore it can be installed without having to modify the machine. Do not modify the machine electric panel without the machine manufacturer authorisation.

**Disconnect the receiving unit by detaching all the electrical connections each time the machine is welded (welding irreparably damages the electronic circuits).**

**Installation**

**The receiving unit must be placed in a position that favours reception of the signals issued by the transmitting unit.** It should therefore be assembled vertically (antenna upwards). The receiving unit should also be easily accessible to permit working in safe conditions.
If the receiving unit is covered by metal structures or installed inside metal panels, use the relative extension kit for external antennas.

**The antenna must never come into contact with metal parts.**

**It is forbidden to pierce the receiving unit container. Doing so compromises the protection degree against external agents (level IP65).**

The vehicle creates vibrations, therefore antivibration blocks must always be used to reduce the effect that these vibrations have on the receiving unit.

The receiving unit must be positioned away from heat sources (exhaust pipes, alternators, etc.)

**Wiring**

Most machines are connected to the receiving unit by multiple-pole plugs which let the radio remote control be disconnected quickly whenever necessary and replaced by a cable command. This connecting technique is advisable even if the machine is not originally equipped for it.

The reliability of the installation is largely dependent on the quality of the wiring, and connections should therefore be made to the highest standards using multi-core or single-core cables of suitable cross-sectional area for the current to be carried. **Cables should also be flame retardant** (for futher information refer to EN 60204 - 1)

Cables **with anti-oil protection** should be used for connections external to the receiving unit.

**The receiving unit power supply must pass through a switch to permit power disconnection during installation, wiring and/or maintenance operations. To improve radio remote control operation, connect the receiving unit immediately downstream of the machine main switch.**

It is always advisable to check the supply voltage even under maximum load; in this way the maximum variations can be verified (the limit values of tolerated deviation are given both in the Technical Data and on the technical card of the Radio remote control).

**Receiving unit supply voltage fluctuations that exceed the limit values can compromise regular radio remote control operation.**

The C26-PRO series radio remote controls are equipped with circuits that protect against involuntary movements from the actuator rest position (SAFETY function).
This protection is available if the movement commands common of the receiving unit is in serial with the STOP contact and SAFETY contact (which close when a movement command is transmitted). On the contrary, the selection command common can not be in series with the SAFETY contact.

**Example of wiring**

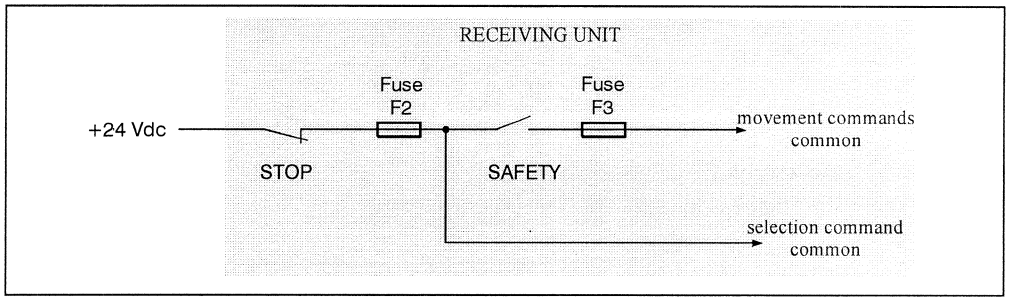


**Proportional output setting**

**Autec supplies the radio remote control with the proportional output values already set depending on type of valves. During installation, these values must be verified and, if necessary, modified according to how the machine is to user's working preference (see chapter 9).**

**Testing**

When installation and wiring have been completed, always do the following:

- make sure that when the radio remote control STOP pushbutton is pressed the machine goes into a **situation of safety** (through direct action on the general solenoid valve of the main circuit), **the motor possibly switches off** and, if present, **the main line contactor opens** to remove voltage.
- make sure that the manoeuvres carried out by the machine and which have been commanded by the transmitting unit **correspond exactly** (this correspondence is given in the technical data sheet)
- check **safety circuit** operation (a simple way of doing this is to remove fuse F3, housed on the main board of the Receiving Unit. Make sure that in these conditions no movement command can be carried out, then insert the F3 fuse again and check correct operation)

**The installer must also compile and/or verify the two copies of the technical data sheet, where the wiring layout between the receiving unit and the machine is given. The first copy of the technical card is inside the receiving unit, the second is annexed to the user's manual. The installer must put the date of installation, the sign and the stamp on both copies.**

## 5 WARNINGS REGARDING USE

**The radio remote control can only be used by operators who:**
**- have read and understood this manual,**
**- are qualified and trained,**
**- know the "radio remote control + machine" system well.**

**Autec cannot be held responsible if the radio remote control is installed on applications other than those permitted and if used in irregular working conditions.**

**Before starting to work, it is advisable to make sure that there are no physical impediments for pressing the STOP pushbutton.**

**To work efficiently and to prevent possible emergency situations, it is necessary to select a position from where it is possible to:**
**- remain inside the typical working range of the radio remote control (see chapter 12)**
**- visibly follow the machine, its movements and a possible load at all times.**

**During operation**

**The operator must:**
**- switch off the transmitting unit each time work is stopped**
**- NEVER leave the transmitting unit unattended with the starting key inserted**
**- avoid working if the battery is almost flat.**

**The operator should never switch on or activate the transmitting unit unless ready to start working. A radio link can be created even outside the active range and from enclosed places, making the radio remote controlled machine carry out undesired commands.**

**In case of danger**

**If a danger situation arises, the operator must intervent immediately by pressing the STOP button, which instantly interrupts machine movement.**

**As not all dangers are caused by the "radio remote control + machine" system, the operator should be careful even when emercency situations are present in the work area. The operator should, also in this case, intervene manually by activating the STOP command.**

**In case of fault**

**In case of faults or damaged parts, ALWAYS STOP the "radio remote control + machine" system until the problem has been solved.**
**Any damaged part can ONLY be replaced by authorised Autec personnel and only using original Autec spare parts.**

## 6 WARNINGS REGARDING MAINTENANCE

**While carrying out routine and special maintenance on the radio remote control and the machine, remove the battery from the transmitting unit and the power supply from the receiving unit (disconnect both the positive and the negative poles).**

**Routine maintenance**

The radio remote control does not need any particular kind of maintenance, however the following should be observed:
1. Remove dust or accumulations of other material from the transmitting and receiving units. Never use solvents or flammable/corrosive materials to clean, and do not use high pressure water cleaners or steam cleaners.
2. Store the transmitting unit in clean and dry areas.
3. Make sure that the transmitting unit gaskets, joystick bellows, selectors caps and pushbuttons are intact, soft and elastic and that the panel symbols can be clearly seen.
4. Make sure that the battery seat is always clean.
5. Make sure that the transmitting unit battery contacts are clean.
6. Make sure that the transmitting and receiving units are structurally integral.

**Special maintenance**

**Any fault should be repaired by authorised Autec personnel (contact Service), using original Autec spare parts only.**

The following radio remote control data must be communicated in order to make interventions faster and more reliable:
- serial number
- purchase date (given on the guarantee certificate)
- problem found
- address and telephone number of the place where the device is being used (with the name of the person to contact)
- supplier.

**It is better to have read and understood all parts of this manual, and made sure that all the instructions it contains have been followed correctly before contacting the Service technicians.**

**Warrantly**

The conditions of warranty applicable to the radio remote control are specified in the "Warranty Certificate" in the manual.
**The electronic components which have a 3 year guarantee are: MTX_____, MRX_____, RD97____, RI97____ and CH97____.**
The radio remote control identification data are written on a plate both on the transmission unit and on the receiver unit. **The plates MUST NOT be removed from where they are placed or damaged otherwise the warranty will be forfeited.**

## 7 TRANSMITTING UNIT AND HOW IT WORKS

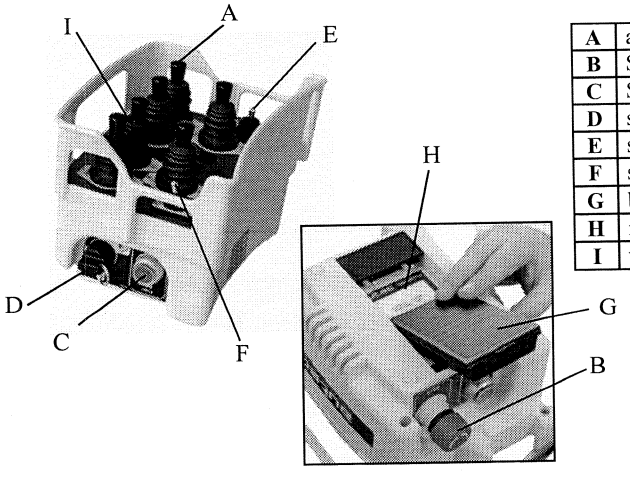


| | |
|---|---|
| **A** | actuators (joystick or selector) |
| **B** | STOP push button |
| **C** | START / alarm push button |
| **D** | starting key |
| **E** | selector rpm +/- |
| **F** | speed selector |
| **G** | battery |
| **H** | identification plate |
| **I** | two signalling leds *(green and red)* |

**Power on and starting**

Check that the starting key is in position "O", insert the battery in its housing without force. Check that the STOP push button has not been pressed and that none of the actuactors have been out of neutral position. Turn the key to "I" and activate START push button and release it when the green light starts to flash.

**The transmitting unit only switches on if the battery is charged enough and if all the actuators are inactive.**

**Commands**

It is possible to control the radio remote machine only after the transmitting unit has been radio linked to the receiving unit (signalled by the lighting up of the ENABLE pilot light on the receiving unit (see chapter 8)).

Activate the actuators that carry out the moves to be made (all the movement commands are in line with category 3 according to the EN 954 - 1). Some transmitting unit commands are given below:

**Clacson**

With the transmitting unit switched on, press the START pushbutton: the machine horn/alarm activates.

**STOP**

To immediately stop the machine, press the STOP pushbutton: the transmitting unit switches off automatically.
To start working again, rotate the STOP button in the direction indicated and repeat the power on and starting procedures.

**The STOP pushbutton must be used each time the machine has to be stopped immediately because of a danger situation.**

The STOP circuit is in line with category 4 according to the EN 954 -1.

**RPM +/-**

This selector works in two ways:
1) during normal operation: increases (rpm +) or decreases (rpm -) the machine motor turns
2) during the setting up phase (REMOTE SET UP): see chapter 9

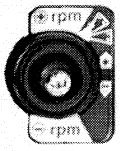


**Speed selector**

A speed selector may be present, which makes the machine operate at different speeds as necessary. This selector can have two, three or four positions which respectively activate two, three or four speed levels.

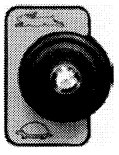

**Frequency change**

In case of interference or conflict with other radio systems, it is possible to change the radio frequency being used.
With the transmitting unit powered and started, keep the START pushbutton pressed for 5-6 seconds: a prolonged beep accompanied by the switching on of both signalling leds indicate that the frequency has changed. During this operation the receiving unit switches off: press the START pushbutton again to start working normally.

**LED signals**

Some transmitting unit operating conditions are signalled by two signalling leds (one green and one red)

| Type of signal | Led | |
|---|---|---|
| | green | red |
| Slow flashing | normal operation | |
| Quick flashing | Warning that the battery is almost not charged | Warning that the battery is not charged |
| Continuos light during power on* | | command operated during the power on |
| Both lights steadily lit simultaneously * | frequency changed | |
| * accompanied by an acoustic signal | | |

When the battery is approximately 90% discharged, the green light will start flashing at a faster rate to inform the operator that the battery requires recharging. If the operator continues to use the radio control, approximately 3 minutes before the battery is fully discharged, the red light will start flashing and an acoustic alarm will sound.
In this situation, the operator must return the machine to a condition of safety (by pressing the stop button), switch off the transmitting unit, and recharge the battery or fit a fully charged battery.

**Power off**

Turn the ignition key to "O".
Always remember to extract the starting key and put it in a safe place.

**Automatic power down**

The transmitting unit can switch off automatically when:
- the battery is not charged enough and/or
- the radio remote control has not been used for 3 and a half minutes (to deactivate automatic switching off, please contact Autec authorised personnel).

**Recharging the battery**

Remove the battery from the transmitting unit and insert in the battery charger.
The "ON CHARGING" light will illuminate to indicate that the battery is being charged. Once the battery is fully charged, the "END OF CHARGE" light will illuminate. Battery charging should be performed at an ambient temperature within the range +5°C to +35°C.

**See the supplied booklet for all instructions, warnings and technical data regarding the batteries and the battery changer.**

## 8 RECEIVING UNIT

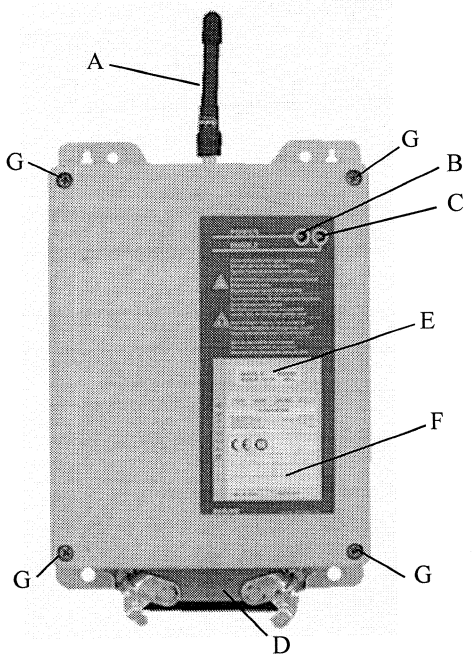


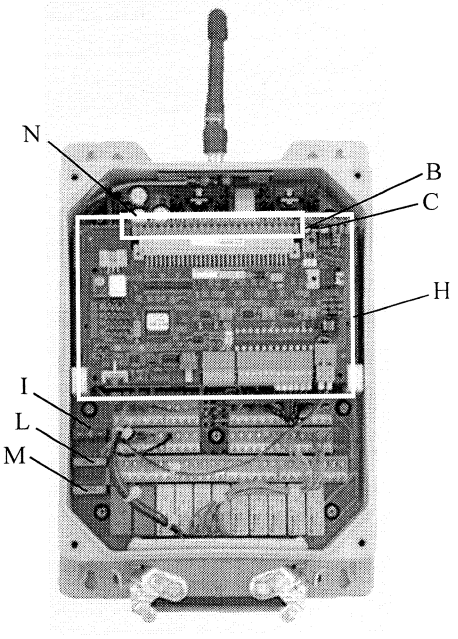


| | |
|---|---|
| **A** | antenna |
| **B** | POWER light |
| **C** | ENABLE light |
| **D** | connection plug |
| **E** | identification plate |
| **F** | technical data plate |
| **G** | closing screws |

| | |
|---|---|
| **B** | POWER light |
| **C** | ENABLE light |
| **H** | RI97-08 module (see chapter 9) |
| **I** | fuse F1 |
| **L** | fuse F2 |
| **M** | fuse F3 |
| **N** | internal led |

**External signalling**

The POWER light indicates the presence (on) or not (off) of the power supply in the receiving unit
The ENABLE light indicates that the connection between the transmitting unit and the receiving unit is enabled (on) or disabled (off).
When the receiving unit is powered, proper operation is indicated when :
- POWER and ENABLE lights on, with transmitting unit on;
- POWER light on and ENABLE off, with transmitting unit off.

**Internal signalling**

The leds that are present show when a relay has activated: when a led switches on, this means that the relative command relay given in the following drawing (also present inside the receiving lid cover) has been activated:

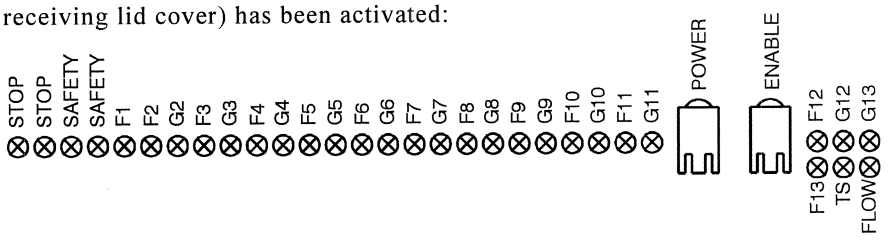


**Functions**

**SAFETY**

The C26 PRO series radio remote control is equipped with a safety function called SAFETY which protects the system from involuntary movements caused by possible radio remote control faults.
This function constantly controls the rest position (neutral) of the movement actuators in the transmitting unit and is available on the receiving unit SAFETY relay output.

**FLOW**

Activating a movement command also activates the FLOW function: this commands the solenoid valve which puts the oil in the hydraulic circuit of the main distributor under pressure.

**T.S.**

T.S. (TIMED STOP) is the command that switches off the machine diesel motor: it remains active for 10 seconds after the STOP pushbutton has been pressed.

**Fuse**

The three fuses inside the receiving unit have the following characteristics:

| Fuse | Function | Technical data |
|---|---|---|
| F1 | POWER SUPPLY circuit guard | 4A (32Vdc, autofuse) |
| F2 | STOP circuit guard | 10A (32Vdc, autofuse) |
| F3 | SAFETY circuit guard | 10A (32Vdc, autofuse) |

## 9 PROPORTIONAL OUTPUT SETTING PROCEDURE (REMOTE SET UP)

**The proportional outputs must only be set by qualified and trained personnel who respect all the warnings given in chapters 4, 5 and 6.**

**Information about RI97-08 module**

The proportional outputs of RI97-08____ module are programmed at the values given on the relevant technical data sheet. The identification number of the technical data sheet for each radio remote control is written on data memory (K2)).

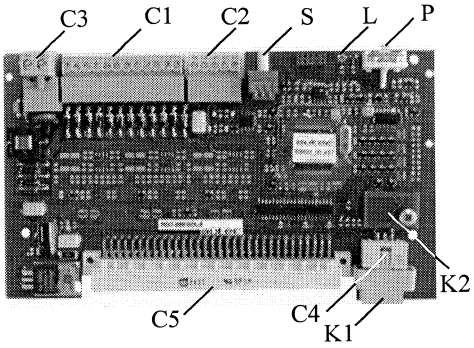


| | |
|---|---|
| **C1** | connector for the proportional outputs |
| **C2** | connector for the auxiliary proportional outputs |
| **C3** | connector for the power supply |
| **C4** | connector for the calibration key |
| **C5** | connector for the connection to the master board |
| **L** | green led |
| **K1** | calibration key |
| **K2** | data memory |
| **P** | reset pushbutton |
| **S** | rotary switch |

**Never leave the K1 calibration key inserted during radio remote control use. The key is only needed during the calibration phase and, when inserted, only one proportional command can be activated at a time.**

To reset the initial proportional output values (i.e. those given in the technical data sheet), with calibration key K1 inserted, just keep reset button P pressed until the green led L stops flashing and remains lit.
To keep the same settings in case of module replacement, move the K2 memory from the old module to the new one.

**Preparation for setting**

1. Make sure that the transmitting unit is switched off.
2. Disconnect the power from the receiving unit.
3. Open the receiving unit and insert the K1 settings key into the C4 connector.
4. Power the receiving unit. ATTENTION: From this moment onwards do not touch the receiving unit until setting up has been completed (otherwise you risk losing the settings that have already been set)
5. Turn the transmitting unit ignition key to "I" and press the START pushbutton.
6. Turn the starting key to the " " position (REMOTE SET UP).

**Setting**

7. Select the parameters to be set using the rotary switch S, which can be found on the RI97-08 module, and the RPM+/- selector, which is present on the transmitting unit (+ increases the value being set, - decreases it).

**In modules with voltaged outputs it is possible to set positions 1, 2, 3, 4 and 5. In modules with current outputs (PWM) it is possible to set positions 0, 1, 3 and 4.**

**If the joystick is moved out of its rest position during setting, the horn/alarm sounds for 0.5 seconds, indicating that you are in the minimum setting area.**

**Each single position of the speed selector present on the transmitting unit must be set.**

**Setting modules with voltage outputs**

**Position 1**

When the rotary switch S is at 1, it is possible to regulate **the maximum and minimum voltage values of the two semiaxes of a joystick**. Proceed as follows:
1. To set the maximum value, take the joystick to the maximum range of the semiaxis to be calibrated. Use the toggle switch RPM +/- to modify the value while maintaining same joystick position.
2. To set the minimum value, take the joystick just out of the rest position of the semiaxis to be calibrated. Use the toggle switch RPM +/- to modify the value while maintaining same joystick position.

**Position 2**

When the rotary switch S is at 2 the **voltage value which corresponds to the mechanical rest position of the joystick** can be regulated. Normally, this value shouldn't be modified. Proceed as follows:
- take any joystick out of the rest position
- use the toggle switch RPM +/- to modify the value while maintaining same joystick position.

**Positions 3 and 4**

When the rotary switch S is at 3 and 4, it is possible to regulate t**he maximum and minimum voltage values of auxiliary outputs Z8 and Z9 respectively**. Proceed as follows:
1. To set the maximum value, turn the Z8 (or Z9) command knob (present in the transmitting unit) fully clockwise. Use the toggle switch RPM +/- to modify the value while maintaining same knob position.
2. To set the minimum value, turn the Z8 (or Z9) command knob (present in the transmitting unit) fully counterclockwise. Use the toggle switch RPM +/- to modify the value while maintaining same knob position.

**Position 5**

**Semiaxis direction is inverted** when the rotary switch S is at 5. Proceed as follows:
- take the joystick of the axis to be inverted out of the rest position
- while maintaining this situation, use the toggle switch RPM +/- on the transmitting unit. Move it to + in order to invert the semiaxis direction or to - in order to reset the semiaxis direction.

**Setting modules with current (PWM) outputs**

**Position 0**

When the rotary switch S is at 0, **the PWM (current) signal frequency** can be adjusted. Normally this value shouldn't be modified. If necessary, proceed as follows:
- take one joystick out of the rest position
- use the toggle switch RPM +/- to modify the value while maintaining same joystick position.

**Position 1**

When the rotary switch S is at 1, it is possible to regulate **the maximum and minimum voltage (or current) values of the two semiaxes of a joystick**. Proceed as follows:
1. To set the maximum value, take the joystick to the maximum range of the semiaxis to be calibrated. Use the toggle switch RPM +/- to modify the value while maintaining same joystick position.
2. To set the minimum value, take the joystick just out of the rest position of the semiaxis to be calibrated. Use the toggle switch RPM +/- to modify the value while maintaining same joystick position.

**Positions 3 and 4**

When the rotary switch S is at 3 and 4, it is possible to regulate **the maximum and minimum voltage values of auxiliary outputs Z8 and Z9 respectively**. Proceed as follows:
1. To set the maximum value, turn the Z8 (or Z9) command knob (present in the transmitting unit) fully clockwise. Use the toggle switch RPM +/- to modify the value while maintaining same knob position.

2. To set the minimum value, turn the Z8 (or Z9) command knob (present in the transmitting unit) fully counterclockwise. Use the toggle switch RPM +/- to modify the value while maintaining same knob position.

**Saving the setting**

8. Switch off the transmitting unit to save the settings.
9. Disconnect power from the receiving unit.
10. Extract the K1 settings key.
11. Close the receiving unit and power it.

## 10 RADIO FREQUENCIES

The radio frequencies that are programmed in the radio remote control belong to the frequencies permitted by the European norms that are permitted when the device is put onto the market.

**Check for possible user conutry limitations in "Limitations & Authorisations" enclosure.**

A radio remote control can be programmed in AUTOMATIC SCAN or MANUAL SELECTION.

**Automatic scan**

A radio remote control is normally programmed by the producer in the following manner: it can therefore operate in any of the available frequencies. In cases of interference or conflict with other systems, the working frequency can be moved (see paragraph "Frequency change") without having to touch the inside of either the transmitting or the receiving units.

**Manual selection**

**Only contact Autec authorised personnel if the working radio frequency has to be set in this manner.**

Using the radio remote control in the manual selection mode makes it possible to work at a specific frequency. To set this frequency, you must set the dip switches present in the transmitting and receiving modules.

## 11 DIAGNOSTIC

If the "radio remote control + machine" does not start, you should check if the problem is caused by the radio remote control or the machine. Before doing anything else, therefore, connect the wired control station: if the machine does not start, the problem is caused by the machine.
If the machine starts normally but only if activated by the wired control station, the problem lies in the radio remote control. In this case, carry out the following controls.

**Diagnostic of transmitting unit**

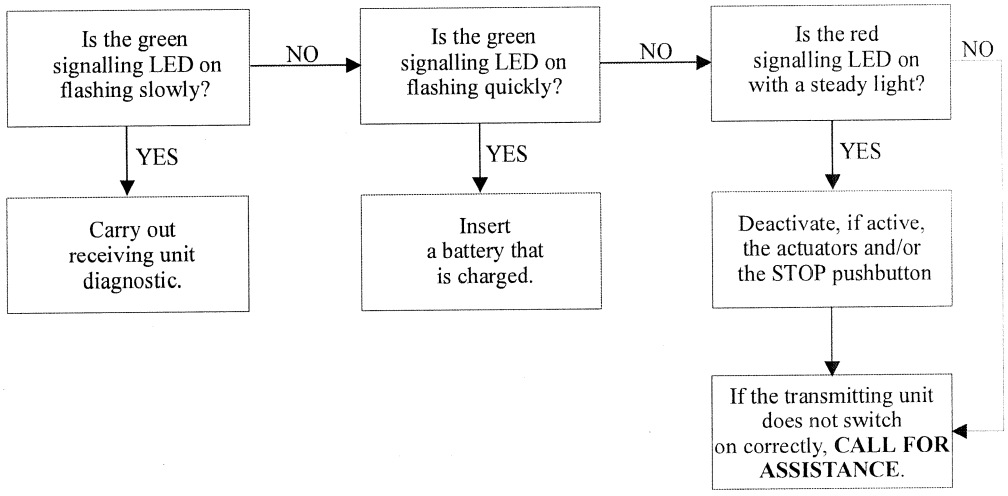


**Diagnostic of receiving unit**

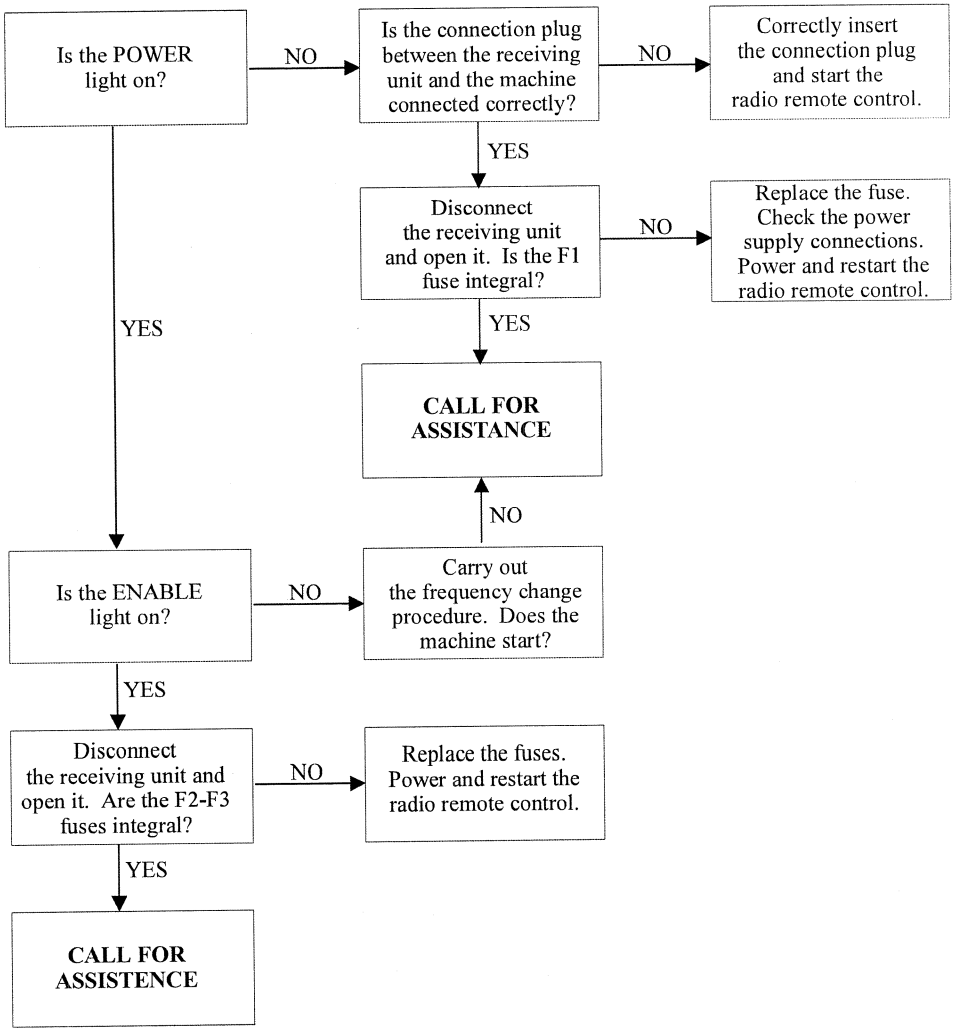

## 12 TECHNICAL DATA

### General

Frequency range
Europe ..... 433,100÷434,6875 MHz
..... 869.7÷870 MHz
U.K. ..... 458,500÷458,800 MHz
Australia ..... 472,0125÷472,1125 MHz
USA ..... 450÷470 MHz
Programmable radio channel (step 25 KHz)
Europe ..... 64
U.K. ..... 11
Australia ..... 4
USA ..... 6 groups of 128
Channel spacing ..... 25 kHz (option 12.5 kHz)
Hamming distance ..... ≥8
Probability of non-recognition of error ..... $<10^{-11}$
Typical working range ..... 150 m
Working temperature ..... -20°C÷+70°C
Passive emergency time ..... 0.5/1.5 sec
Time of reply to commands ..... 70÷120 ms
Time of reply to STOP ..... 70÷120 ms

### Transmitting unit

Number of available commands ..... 6+2 analog+12 on/off + start + stop
Antenna ..... internal
Type of modulation ..... GFSK
Transmitting power ..... <10 mW (433 MHz)
..... < 5 mW (870 MHz)
Power supply: battery pack ..... NiMH 7.2V - 1.3 Ah
Turn off voltage ..... 6.0 V
Autonomy with fully charged battery (at 20°C) ..... 8÷10 hours
Battery almost discharged prewarning time ..... about 15 min.
Warning that the battery is discharged ..... about 3 min.
Housing ..... PA6 fg 20%
Protection grade ..... IP65
Dimensions ..... (236x160x173) mm
Weight (with battery) ..... ≤ 2 kg

### Receiving unit

Power supply ..... 8÷30 Vdc (< 40W)
Antenna ..... external
Max switching capacity of STOP and SAFETY relay contacts ..... 10 A (30 Vdc)
Max switching capacity of movement command relay contacts ..... 4 A (30 Vdc)
Max switching capacity of selection command relay contacts ..... 6 A (30 Vdc)
Sensitivity receiver ..... 0,5µV per 20 dB SINAD
Housing ..... PA6 fg 20%
Protection grade ..... IP65
Dimensions ..... (180x230x95) mm
Weight ..... 2.8 kg
Drilling template ..... A = 148 mm
B = 116 mm
C = 253 mm
D = 253 mm

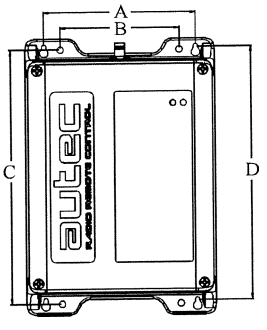


### Battery charger and battery

Technical data inside dedicated booklet

# NiftyLift Basket-Observer System

## *Description:*

The machine is controllable from either the Basket  or Observer transmitter. In normal operation, control is from the Basket unit. In this case, **the Observer transmitter must still be powered on** and operating, with the BASKET/OBSERVER switch in the BASKET position. The controls on the Observer transmitter are non-functional in this mode, with the exception of the STOP button which is always active.

To take control of the machine, the switch on the Observer transmitter is moved to the OBSERVER position. This disables the basket transmitter (including its STOP button) and all commands are now available from the Observer transmitter.

## *Observer transmitter*

- Place a charged battery into the Observer transmitter
- Ensure that the STOP button is out – gently twist clockwise to release it if necessary.
- Check that the DC-PUMP / POWER-TOOLS switch is in the centre (OFF) position
- Ensure the BASKET/OBSERVER switch is in the BASKET position
- Turn the keyswitch to the '1' position. (Do not turn further to the TEACH position)
- Press the START button on the left side of the transmitter.
- The transmitter will start, and the green LED commence flashing about once per second.
  .

## *Basket Transmitter*

- Repeat the steps above for the Basket transmitter, noting that there is no BASKET/OBSERVER switch on the Basket transmitter.
- Note that **the Observer system must be started first** – you cannot start the Basket then the Observer, as the Basket receiver is not powered until the Observer is active.

## *Pre-usage Test*

Before each usage session, test that the STOP command on the transmitter removes hydraulic power, and that all motion functions are operating correctly. It is recommended that these tests be undertaken first from the Basket transmitter, and then from the Observer transmitter (with the BASKET/OBSERVER switch in the OBSERVER position).

## *Managing Interference*

If any interference to the radio control system disrupts the radio link for more than 500ms, then the machine will STOP. If this occurs, proceed as follows:

- Press the Start button on the Observer transmitter
- Press the Start button on the Basket transmitter

If interference persists, then it may be necessary to change the operating frequency of either the Basket transmitter, or the Observer transmitter, or both.
To do so:

- Press and hold the Start button for approximately 8 seconds. The transmitter will emit a beep, and the red lamp will flash. Release the Start button, and then press it again to restart the system normally.

Note that if interference occurs to the Basket remote, the system can be restarted by pressing the Start button on the Basket transmitter only. If interference occurs to the Observer remote, it will require restarting of first the Observer, then the Basket remote.

**Inertial Measurement Unit – Calibration Instructions**
**Current as of 3/11/2010**

The IMU-01A and IMU-01B are used to detect the current tilt of an EWP Basket. For proper operation they should be calibrated once mounted on the EWP, and ideally as part as a fixed maintenance schedule (period TBD).

IMUs out of calibration will result in either the basket progressively tilting in one direction over the course of months, or alternatively nuisance E-Stops due to an IMU Disparity error.

The calibration process is done in two parts. First, lower the basket to ground level so the IMUs are easily accessible. Next turn off power to the FOENC-01 levelling box (located near the basket). Manually adjust the basket levelling controls until the IMUs, and therefore the basket, are level.

Remove the lead from an IMU, then connect the calibration tool. Hold down the button on the tool until the light blinks at a constant rate. Release the button then re-attach the lead, then repeat for the other IMU.

Use the levelling controls to rotate the basket 90 degrees from level (so that the IMU-01B's connector faces Left). Use the calibration tool for both IMUs as before.

Note that the calibration tools blinks on completion of a successful calibration. Before blinking, the light will flicker briefly as part of the self-test – this is normal.

If the light goes out and does not blink, then the IMU is not orientated correctly (either upright or 90 degrees in the correct sense). If attempting the 90 degree calibration, tilt the basket 180 degrees in the other direction and try again.

If the light stays on, then the IMU has failed its self-test and should be returned to IndustryIQ for service. If the light never flickers at all then the battery in the calibration tool should be replaced.

After calibration, the basket <u>must</u> be manually tilted in both directions to verify the system E-Stops at 10 degrees. Afterwards the basket <u>must</u> be rotated to 5 degrees and left there for several minutes. If the system fails with a disparity error in this time, repeat the calibration process. If a disparity error still occurs contact IndustryIQ.

Known Issues: IMU-01As dated prior to October 2010 have an overly sensitive calibration routine and can be difficult to calibrate. This issue is not safety-related and affected units can be upgraded on request.

Rexroth
Bosch Group

# High pressure Load-Sensing control block of sandwich plate design

RE 64276/06.06 1/48

## Type M4-12

Size 12
Component series 2X
Nominal pressure 350 bar (pump side)
Nominal pressure 420 bar (actuator side)
Maximum flow
– Pump side: 200 l/min with central inlet element
150 l/min with lateral inlet element
– Actuator side: 130 l/min with pressure compensator and load holding function

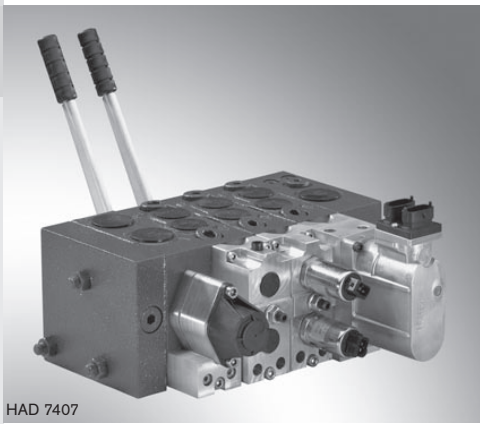
HAD 7407

## Table of contents


| Contents | Page |
|---|---|
| Features | 1 |
| Function, section | 2 |
| Technical data | 3 |
| Ordering code | 4 to 7 |
| Modular design, order examples | 8 to 13 |
| Inlet, directional valve and end elements (symbols, circuit features, characteristic curves) | 14 to 37 |
| Pipe connections | 38 |
| Unit dimensions, attachment options | 39 to 41 |
| Electronic pilot module Features, technical data, Accessories | 42 |


## Features

**System**

– Load pressure-independent flow control
- Open Center for fixed displacement pump
- Closed Center for variable displacement pump

**Design**

– Sandwich plate design
- Inlet element
- Up to 10 directional valve elements
- Up to 20 directional valve elements with central inlet element
- End element

## Features

– Types of actuation
- Mechanical: – Hand lever
  – Tongue
- Hydraulic
- Electro-hydraulic (switching, proportional)
- Electro-hydraulic with on-board electronics (OBE)

**Flow**

— Load pressure-compensated
— High repeatability
— Low hysteresis
— Adjustable by means of stroke limiter

**Pressure relief function**

— Inlet element
- Pilot operated pressure valves of large nominal width

— Directional valve element / actuator ports
- Compact shock valves with anti-cavitation function

— LS pressure relief function
- Can be adjusted for each actuator port
- External pressure setting possible for each actuator port
- Electro-proportional per section

**Fields of application**

— Truck applications
— Drilling equipment
— Forestry machines
— Large and telescopic fork lifts
— Municipal vehicles
— Cranes
— Construction machines
— Lifting platforms
— Stationary applications

## Function, section

1 Housing
2 Main spool
3 Pressure compensator
4 LS pressure relief valves
5.1 Shock valve with anti-cavitation function
5.2 Plug screw
6.1 Stroke limiter A-side
6.2 Stroke limiter B-side
7 LS shuttle valve
8 Spring chamber
9.1 Pressure reducing valve (pilot control valve “a“)
10 Compression spring
11 Hand lever
12 Cover A
13 Cover B

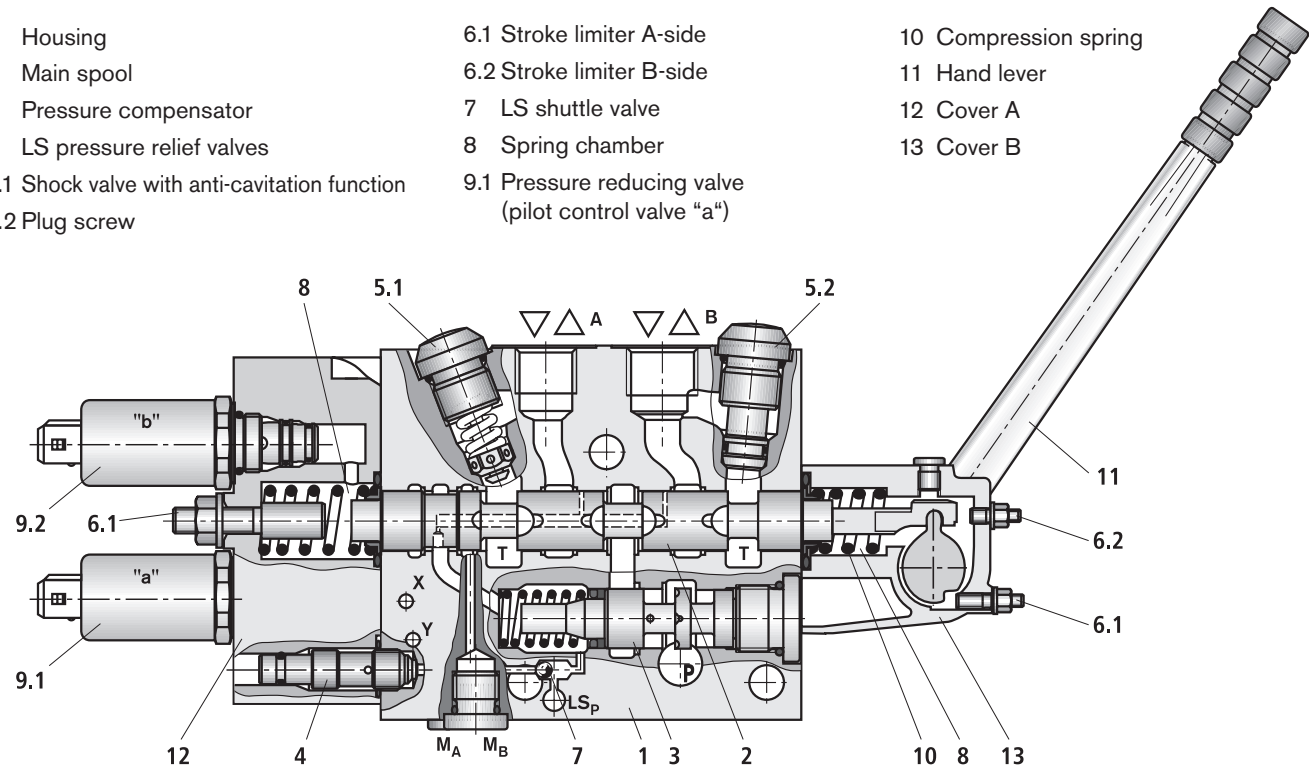


**Control block M4-12**

The directional valves are proportional valves according to the load-sensing principle.

**Actuator control**

Main spool (2) determines the direction and the magnitude of the flow that is fed to the actuator ports (A or B).

Pressure reducing valves (9) control the position of main spool (2). The intensity of the electric current applied to the pressure reducing valve determines the amount of the pilot pressure in spring chambers (8) and consequently the stroke of the main spool (P → A; P → B).

The pressure differential across main spool (2) and hence the flow to the actuator is held constant by means of pressure compensator (3).

**Load pressure compensation**

Changes in pressure at the actuators or the pump are compensated for by pressure compensator (3). The flow to the actuator remains constant even under differing loads.

**Flow limitation**

The maximum flow can be mechanically and individually adjusted on stroke limiters (6).

**Pressure relief function**

The LS pressure per actuator port can be influenced internally by means of LS pressure relief valves (4) or externally via the LS ports MA, MB.

Shock valves with combined anti-cavitation function (5) protect actuator ports A and B from pressure peaks.

The highest load pressure is signalled to the pump via the LS line and integrated shuttle valves (7).

## Symbol

**Ports:**

| | |
|---|---|
| **P** | Pump |
| **A, B** | Actuator |
| **T** | Tank |
| **X** | Pilot oil supply |
| **Y** | Pilot oil drain |
| **LS** | Load Sensing (LS) |
| **$M_A$, $M_B$** | External LS ports |

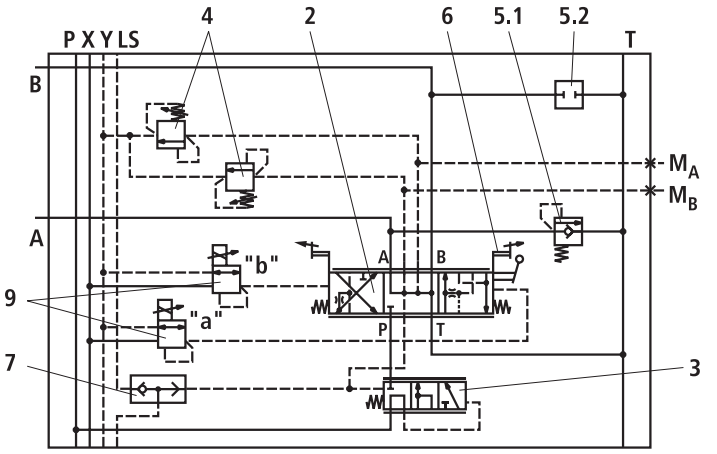

# Technical data

## General

| | | | | |
|---|---|---|---|---|
| Installation orientation | | | | Optional |
| Type of connection | | | | Pipe thread to ISO 228/1 |
| Weight | Inlet element: | Closed Center J | kg | 4.3 |
| | | Open Center P | kg | 6.0 |
| | Central inlet element Closed Center JZ | | kg | 8.4 |
| | Directional valve element, mechanical | | kg | 4.9 |
| | Directional valve element, hydraulic | | kg | 4.2 |
| | Directional valve element, electro-hydraulic | | kg | 4.5 |
| | Directional valve element, electro-hydraulic, with on-board electronics | | kg | 4.8 |
| | Additional weight for hand lever | | kg | 0.6 |
| | End element | | kg | 2.6 |
| Hydraulic fluid and ambient temperature range $\vartheta$ | | | °C | –20 to +80 |
| Painting | | | | Standard painting |

## Hydraulic

| | | | | |
|---|---|---|---|---|
| Max. flow in port | P | $q_{V, max}$ | l/min | 200 with central inlet element |
| | | | l/min | 150 with lateral inlet element |
| | A, B | $q_{V, max}$ | l/min | 130 |
| Nominal pressure | | $p_{nom}$ | bar | 350 (400 on enquiry) |
| Max. operating pressure in port | P | $p$ | bar | 350 (400 on enquiry) |
| | A / B | $p$ | bar | 420 |
| | LS | $p$ | bar | 330 |
| | T | $p$ | bar | 30 |
| | Y | $p$ | bar | At zero pressure to tank |
| Max. pilot pressure in port | X | $p$ | bar | 35 |
| | a, b | $p$ | bar | 35 |
| Pilot pressure range | Hydraulic | $p$ | bar | 8.5 to 22.5 |
| | Electro-hydraulic | $p$ | bar | 6.5 to 17.2 |
| Required control $\Delta p$ across control block | Version S; C | $p$ | bar | 18 |
| Recommended hydraulic pilot control devices | | | | Characteristic curve TH 6... , see RE 64552 |
| LS pressure limitation (adjustment ranges) | | | bar | 50 to 149; 150 to 330 (selected in the factory) |
| Hydraulic fluid | | | | Mineral oil (HL, HLP) to DIN 51524, other hydraulic fluids on enquiry, e.g. HEES (synthetic esters) to VDMA 24568 and hydraulic fluids as specified in RE 90221 |
| Viscosity range | | $\nu$ | $mm^2/s$ | 10 to 380 |
| Max. permissible degree of contamination of the hydraulic fluid Cleanliness class to ISO 4406 (c) | | | | Class 20/18/15, for this we recommend a filter with a minimum retention rate of $\beta_{10} \geq 75$ |

## Electrical

| | |
|---|---|
| Electrical pilot control valves | FTWE 2 K...; see RE 58008<br>FTDRE 2 K...; see RE 58032 } without plug-in connector [1] |
| Recommended amplifiers (further control options on enquiry) | RA 1-0/10; 1 axis, see RE 95230<br>RA 2-1/10; 4 to 6 axes, see RE 95230<br>Control devices RC, see RE 95200 |
| On-Board Electronics (OBE) | Data from page 26 |

[1] Plug-in connectors are not included in the scope of supply and must be ordered separately.

☞ **Note**!

The technical data were determined at a viscosity of $\nu = 30\ mm^2/s$ (HLP46: 50°C).

☞ **Note**!

Further information about the correct handling of hydraulic products of Bosch Rexroth can be found in the brochure “Hydraulic valves for mobile applications – general information“, RE 64 020-B1

## Ordering code

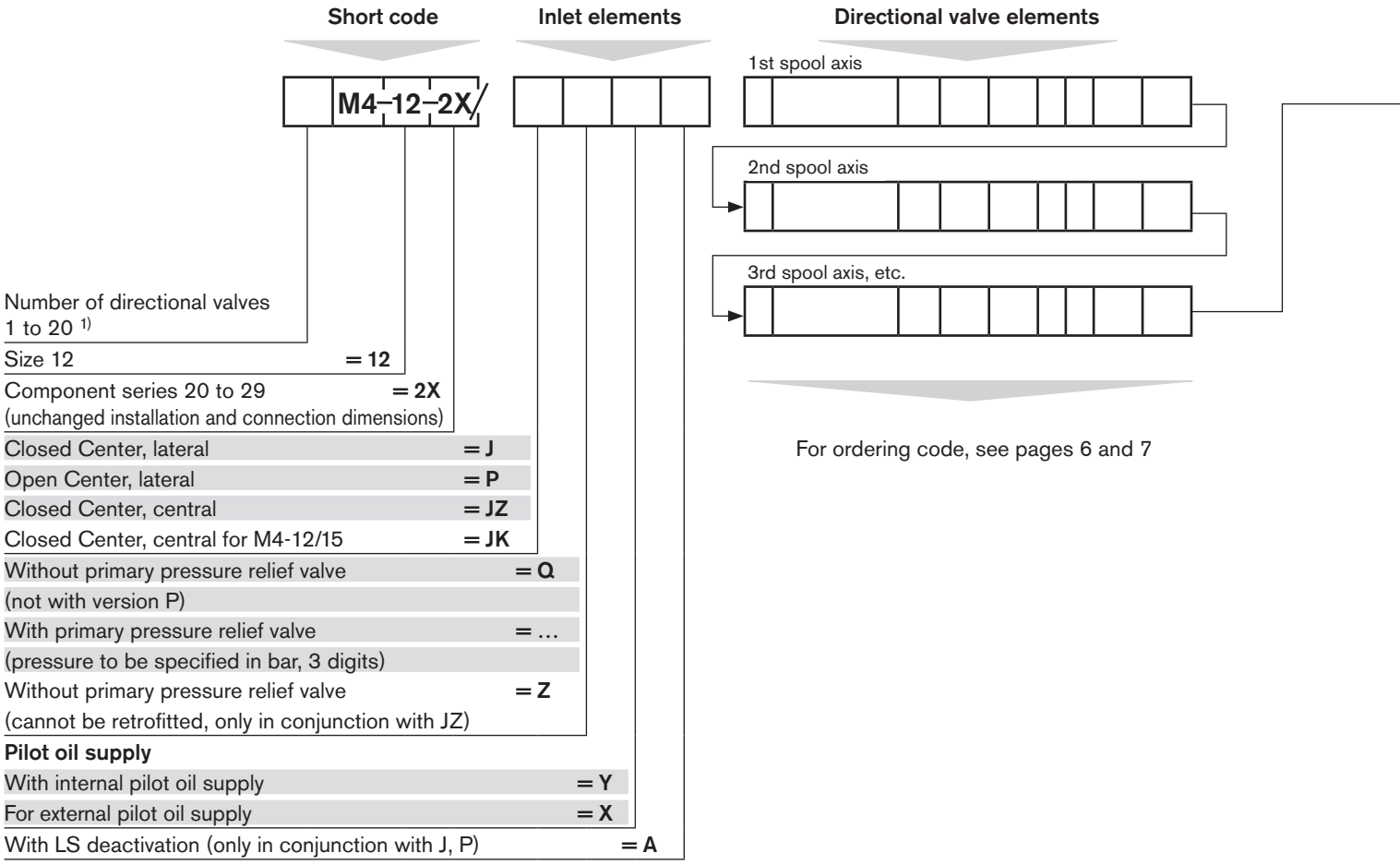


For ordering code, see pages 6 and 7

1) Max. 10 elements per side

= standard product range (M4 configurator)

### Short code

Complete control blocks are defined according to the type code.
The order text is used for determining the technical features and requirements.
The Bosch Rexroth sales organisation derives a short code and a material number from the order text.

Example of a short code of an M4-12 control block with three directional valve elements:

**M4 – 7654 – 2 0 / 3 M4 – 12**

Control block no.

Component series of series (2X)

Revision index of series

Number of directional valve elements

## Ordering code

**End element** | **Supplementary details**

[ ] [V] [01] [ ] [ ] [*]

Further details in clear text

**SO numbers**

**–450 =** Free from aluminium

| Supply voltage 24 V | Supply voltage 12 V | **Supply voltage and plug-in connector** [3] |
|---|---|---|
| **1** | **3** | Junior Timer 2-pin (AMP) |
| **8** | **9** | DT04-2P (Deutsch) |

**Pipe connections**

**01 =** Connections as pipe thread to ISO 228/1

**Seal material**

**V =** FKM seals [2]

**M =** NBR seals (on enquiry)

**End element**

**LA =** End element without ports, **with** internal LS unloading

**LAPT =** End element LA with additional P and T port

**LZ =** End element with LS port, **without** internal LS unloading

**LZPT =** End element LZ with additional P and T port

**LU =** End element for use with central inlet element

**LA** [ ][ ] **=** End element LA with two mounting cavities

**LU** [ ][ ] **=** End element LU with two mounting cavities

**Q =** Plug screw

**W2 =** Electro-hydraulic proportional

**W4 =** Electro-hydraulic switchable

[2] The block preferably contains FKM, but also NBR seals. Observe the compatibility of seals with the hydraulic fluid used!

[3] Indication required only in conjunction with electro-hydraulic actuation and electro-proportional pressure limitation.

☞ **Note:**
Plug-in connectors are not included in the scope of supply and must be ordered separately, see also pages 36, 46.

= standard product range (M4 configurator)

## Ordering code for directional valve element

**Directional valve element**

| | |
|---|---|
| **With** pressure compensator, **with** load holding function | = **S** |
| **Without** pressure compensator, **with** load holding function | = **C** |
| **Without** pressure compensator, **without** load holding function | = **Q** |
| **Without** pressure compensation bore for change-over axis | = **Z** |

| | | | |
|---|---|---|---|
| With LS pressure relief valve (pressure to be specified in bar, 3 digits) | = … | | … [1] |
| With LS DB plug screw | = **Q** | | **Q** [1] |
| With only 1 LS pressure relief valve for identical pressure setting in A and B | = = | **M** | … |
| With LS unloading plug | = **B** | | **B** |
| Without LS pressure relief valve (LS DB cannot be retrofitted) | = **Z** | | **Z** [2] |

| | |
|---|---|
| Housing **with** measuring ports | = **M** |
| Housing **without** measuring ports | = **Z** |
| Housing for change-over axis [3] [5] | = **U** |
| Housing for electro-proportional or switchable pressure relief function [4] | = **K** |
| – 210 bar, falling characteristic curve [4] | = **L** |
| – 210 bar, rising characteristic curve [4] | = **J** |
| – 350 bar, falling characteristic curve [4] | = **R** |
| – 350 bar, rising characteristic curve [4] | = **N** |

**Spool symbol**

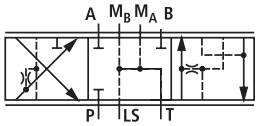


= **E**

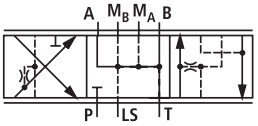


= **J**

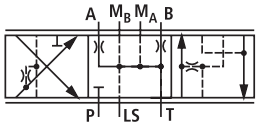


= **Q**

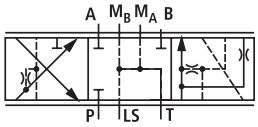


= **R**

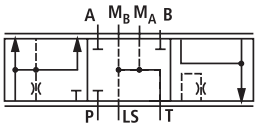


= **P**

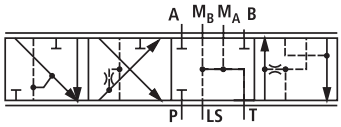


= **W**

| | |
|---|---|
| Flow in l/min, 3 digits, e.g. 070-070; actuator ports “A“ and “B“ | = … – … |
| Spool with pressure function in T, only in conjunction with E-, J- or Q-spool [5] | = … **T** … |

= standard product range (M4 configurator)

[1] “Z“ impossible

[2] “M“ impossible

[3] Only “ZUZ“ combination possible

[4] Exact details in clear text, see page 24; see also data sheet RE 18139

[5] Rating by technical sales department

## Ordering code for directional valve element

**Directional valve element**

| | | | | | | |
|---|---|---|---|---|---|---|
| | | | | | | * |

Further details in clear text

**SO numbers**

–011 = One-sided actuation, two positions

**Secondary valves**

Actuator port „A“ / Actuator port „B“

| | |
|---|---|
| A … = | Shock/anti-cavitation valve, adjustable |
| H … = | Shock/anti-cavitation valve, not adjustable |
| Z = | Without secondary valve (cannot be retrofitted) |
| Q = | Plug screw (secondary valves can be retrofitted) |

**Actuation cover B**

– = Standard cover

| Hand lever position | | | Without hand lever | **Encapsulatetd actuation** |
|---|---|---|---|---|
| 60° | 0° | -60° | | |
| K | L | M | R | Hand lever, following |
| N | O | P | X | Hand lever, not following |
| B | F | D | | Hand lever, following (clamping piece with lever) |
| G | H | J | | Hand lever, not following (clamping piece with lever) |
| T | U | V | | Hand lever, following (clamping piece without lever) |
| Q | S | C | | Hand lever, not following (clamping piece without lever) |

| Tongue | Tongue with lever | **Non-encapsulated actuation** |
|---|---|---|
| Z | N [9] | |

| Supply voltage 24 V | Supply voltage 12 V | **Supply voltage and plug-in connector** [8] |
|---|---|---|
| 1 | 3 | Junior Timer 2-pin (AMP) |
| 8 | 9 | DT04-2P (Deutsch) |

**Actuation cover A**

| **Encap-sulated,** spring-centred | **Not encapsulated** | | | | |
|---|---|---|---|---|---|
| | Spring-centred | Detent in | | | |
| | | 1 | 2 | 1, 2 | |
| M | A | B1 | B2 | B4 | Mechanical |

| Standard | With damping orifice, on both sides | With measuring ports, on both sides [7] | With damping orifice, with measuring ports, on both sides [7] | Orifice + check valve for hydraulic override [7] | |
|---|---|---|---|---|---|
| H | | | | | Hydraulic |
| W2 | | W6 | | G2 | Electro-hydraulic proportional |
| W4 | W5 | W8 | W7 | G4 | Electro-hydraulic switchable |

| Digital OBE | | | | | |
|---|---|---|---|---|---|
| Analogue interface | CAN-BR protocol | CANopen protocol | CAN-BR protocol, with position sensor | CANopen protocol, with position sensor | |
| AAQ | CAQ | CBQ | CAS | CBS | Electronic pilot module [6] |

= standard product range (M4 configurator)

[6] See also data sheet RE 64565-07B

[7] Not with electronic pilot module

[8] Indication required only in conjunction with electro-hydraulic actuation and electro-proportional pressure limitation.

**Note:**
Plug-in connectors are not included in the scope of supply and must be ordered separately, see also pages 36, 46.

[9] On enquiry

## Modular design: Control block with lateral inlet element

Control blocks of series M4-12 are designed according to the modular principle. They can be optimally set up to suit the application at hand.

**Order of ordering details (examples):**

| | | | | | | | | | | | | |
|---|---|---|---|---|---|---|---|---|---|---|---|---|
| **Short code** | | M4 | – | 12 | – | 2X/ | | | | | | |
| **Inlet element** | J | Q | X | | | | | | | | | |
| | P | … | Y | | | | | | | | | |
| **Directional valve element** | S | …M… | … | H | – | Q | Q | | | | | |
| | S | ZZZ | … | W2 | – | H… | H… | | | | | |
| | S | ZZZ | … | A | Z | Z | Z | | | | | |
| | S | ZZZ | … | CAQ | K | Q | Q | | | | | |
| **End element** | LA | | | | | | | | | | | |
| | LAPT | | | | | | | | | | | |
| **Supplementary details** | V | 01 | | | | | | | | | | |

**Inlet element**

**1.1** Inlet element “J“ for variable displacement pumps

**1.2** Inlet element “P“ for fixed displacement pumps

**Directional valve element**

**2.1** Housing with secondary valve option

**2.2** Housing without secondary valve option

**3** Hydraulic actuation “H“

**4** Electro-hydraulic actuation “W..“

**5** Mechanical actuation “A“

**6** Electronic pilot module (OBE)

**7** Mechanical actuation “K“

**8** Mechanical actuation “Z“

**9** Standard cover

**10.1** LS pressure relief function port “A“

**10.2** LS pressure relief function port “B“

**11** Hand lever

**12.1** Secondary valve port “A“

**12.2** Secondary valve port “B“

**13** Proportional pressure relief valve type KBPS

**End element**

**14.1** End element “LA“

**14.2** End element “LAPT“

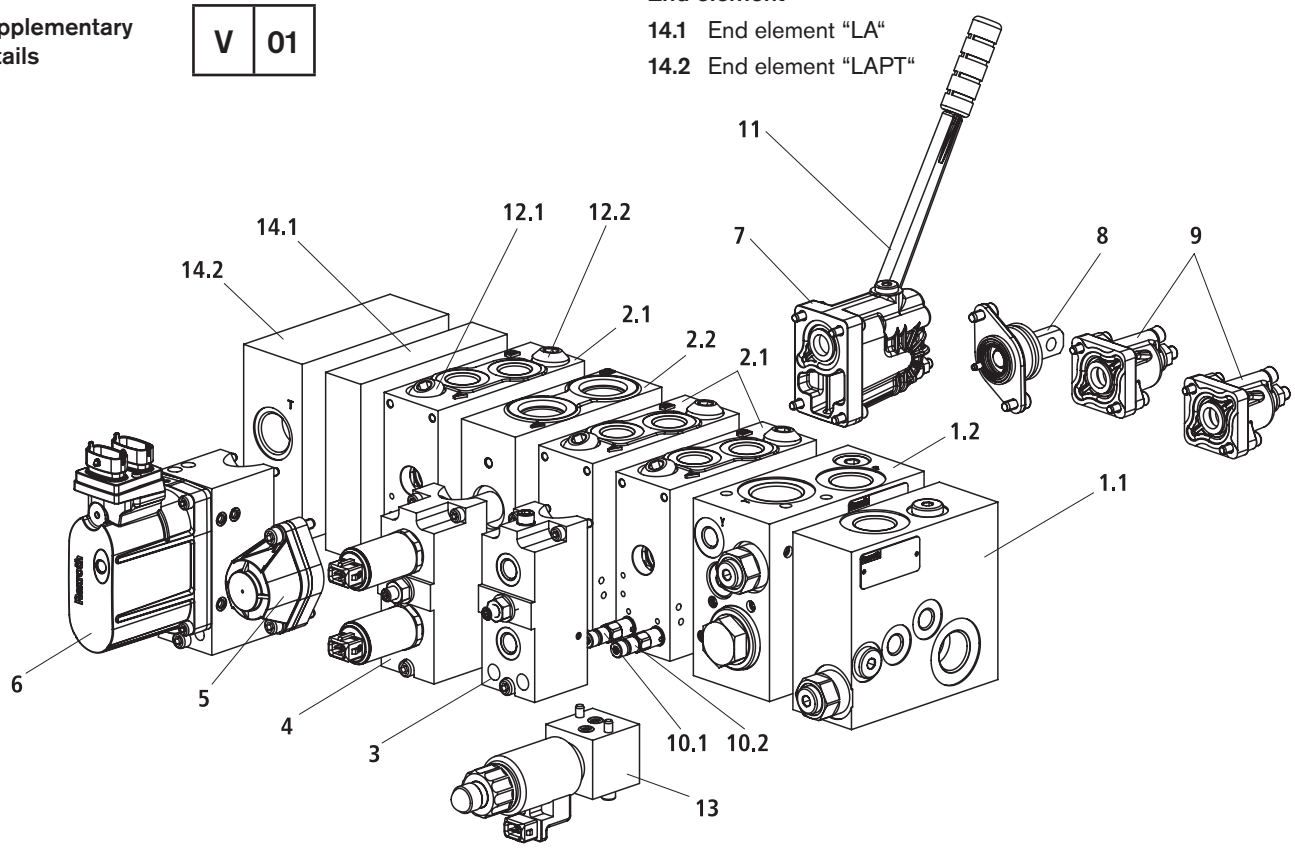

## Modular design: Control block with special inlet element and change-over axis

Control blocks of series M4-12 are designed according to the modular principle. They can be optimally set up to suit the application at hand.

**Order of ordering details (examples):**

| | | | | | | | | | |
|---|---|---|---|---|---|---|---|---|---|
| **Short code** | | M4 | 12 | 2X/ | | | | | |
| **Inlet element** | J | Q | X | A | | | | | |
| | P | … | Y | A | | | | | |
| **Directional valve element** | S | …M… | … | H | – | H… | H… | | |
| | Z | ZUZ | … | W4 | – | Z | Z | | |
| | S | ZZZ | … | B | Z | Q | Q | | |
| | S | ZZZ | … | CAQ | K | A… | A… | | |
| **End element** | LA | | | | | | | | |
| | LAPT | | | | | | | | |
| **Supplementary details** | V | 01 | | | | | | | |

**Inlet element**

**1.1** Inlet element “J“ for variable displacement pumps, with LS shut-off

**1.2** Inlet element “P“ for fixed displacement pumps, with LS shut-off

**Directional valve element**

**2.1** Housing with secondary valve option

**2.2** Housing for change-over axis

**3** Hydraulic actuation “H“

**4** Electro-hydraulic actuation “W..“

**5** Mechanical actuation “B“ (detent)

**6** Electronic pilot module (OBE)

7 Mechanical actuation “K“

**8** Mechanical actuation “Z“

**9** Standard cover

**10.1** LS pressure relief function port “A“

**10.2** LS pressure relief function port “B“

**11** Hand lever

**12.1** Secondary valve port “A“

**12.2** Secondary valve port “B“

**End element**

**13.1** End element “LA“

**13.2** End element “LAPT“

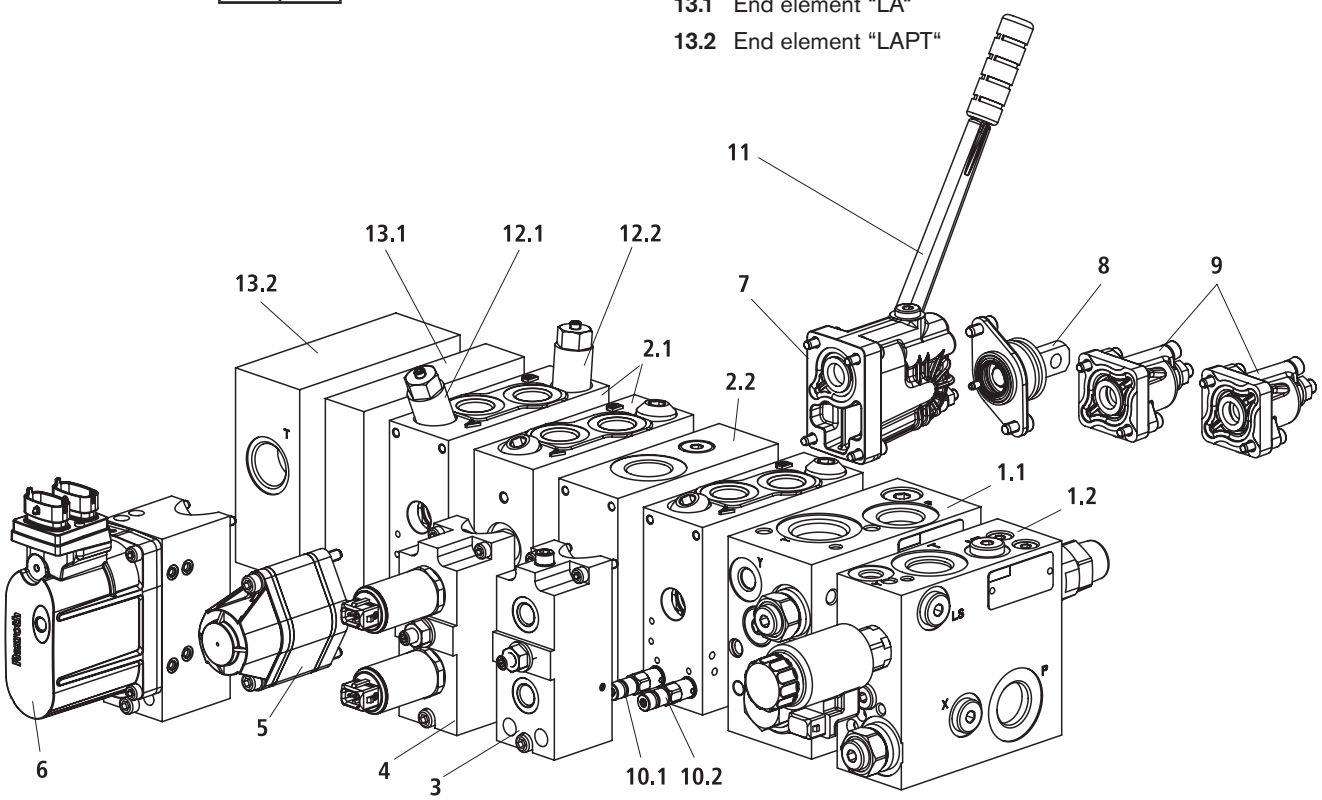

## Modular design: Control block with central inlet element

Control blocks of series M4-12 are designed according to the modular principle. They can be optimally set up to suit the application at hand.

**Order of ordering details (examples):**

| | | | | | | | | |
|---|---|---|---|---|---|---|---|---|
| **Short code** | | M4–12–2X/ | | | | | | |
| **End element** | LU | W2 | W2 | | | | | |
| | LU | | | | | | | |
| **Directional valve element** | S | …M… | … | H | – | Z | Z | |
| | S | = M… | … | W2 | – | H… | H… | |
| **Inlet element** | JZ | … | Y | | | | | |
| **Directional valve element** | S | …M… | … | A | Z | Q | Q | |
| | S | ZZZ | … | CAQ | K | Q | Q | |
| **End element** | LZ | | | | | | | |
| | LZPT | | | | | | | |
| **Supplementary details** | V | 01 | | | | | | |

**End element**

**1.1** End element “LU W2 W2“ with mounting cavities for pilot valves

**1.2** End element “LU“

**Directional valve element**

**2.1** Housing with secondary valve option

**2.2** Housing without secondary valve option

**3** Hydraulic actuation “H“

**4** Electro-hydraulic actuation “W..“

**5** Mechanical actuation “A“

**6** Electronic pilot module (OBE)

**7** Mechanical actuation “K“

**8** Mechanical actuation “Z“

**9** Standard cover

**10.1** LS pressure relief function port “A“

**10.2** LS pressure relief function port “B“

**11** Hand lever

**12.1** Secondary valve port “A“

**12.2** Secondary valve port “B“

**Inlet element**

**13** Inlet element “JZ“ for variable displacement pumps

**Directional valve element**

**End element**

**14.1** End element “LA“

**14.2** End element “LAPT“

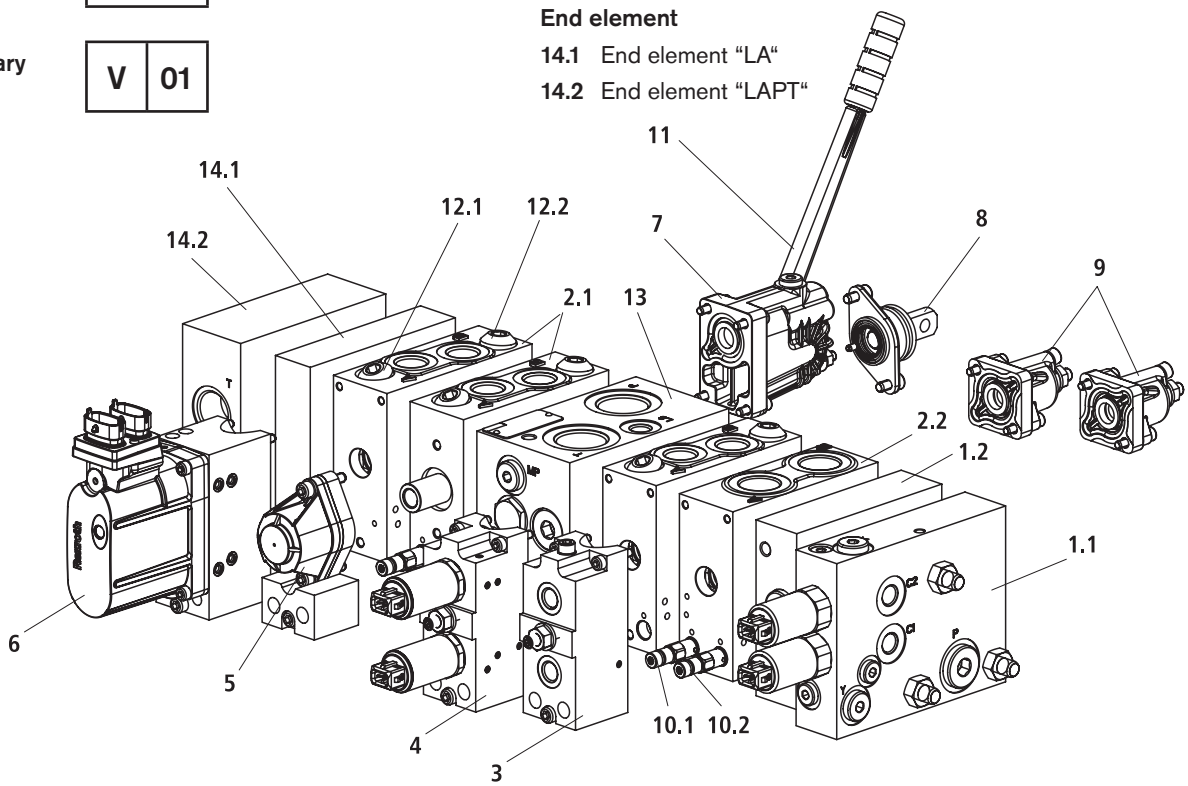

## Order example of Closed Center with lateral inlet element and change-over axis

**Example:**
— 3-fold control block
— Variable displacement pump $q_{V\,max}$ = 150 l/min

**Number of directional valves, inlet element**
- Closed Center, with lateral primary pressure relief valve, set to 250 bar, internal pilot oil supply

**Directional valve elements**

**1st spool axis**
- With pressure compensator, with load holding function
- Without LS pressure relief valves (cannot be retrofitted)
- Spool symbol J, flow in A and B 100 l/min
- Type of actuation: electro-hydraulic proportional
- With Junior Timer 2-pin (AMP) 24 V
- Without secondary valves (cannot be retrofitted)

**2nd spool axis**
- Without pressure compensator, change-over axis
- Without LS pressure relief valves (cannot be retrofitted)
- Housing for change-over axis
- Spool symbol J, flow in C 65 l/min, 90 l/min for internal actuators
- Type of actuation: electro-hydraulic switchable
- With Junior Timer 2-pin (AMP) 24 V
- Without secondary valves (cannot be retrofitted)

**3rd spool axis**
- With pressure compensator, with load holding function
- With LS pressure relief valve for actuator port A 180 bar, actuator port B plugged
- Spool symbol J, flow in A and B 85 l/min
- Type of actuation: digital OBE – CAN-BR protocol
- Overriding hand lever (following)
- Secondary valves: Pressure relief/anti-cavitation valves, actuator port A and B 350 bar (cannot be adjusted)

**End element, supplementary details**
- With internal LS unloading, FKM seals, pipe thread connections

**Ordering code:**

| | | | | | |
|---|---|---|---|---|---|
| 3 | M4 | 12 | 2X | / | J250Y |

1st spool axis

| | | | | | | | | | |
|---|---|---|---|---|---|---|---|---|---|
| S | Z Z Z | J | 100-100 | W2 | 1 | – | Z | Z |

2nd spool axis

| | | | | | | | | |
|---|---|---|---|---|---|---|---|---|
| Z | Z U Z | J | 065-090 | W4 | 1 | – | Z | Z |

3rd spool axis

| | | | | | | | | |
|---|---|---|---|---|---|---|---|---|
| S | 180 M Q | J | 085-085 | CAQ | K | H350 | H350 |

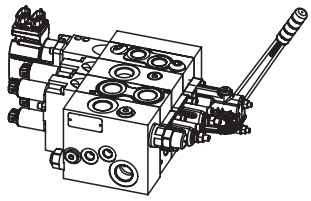

| | | |
|---|---|---|
| LA | V | 01 |

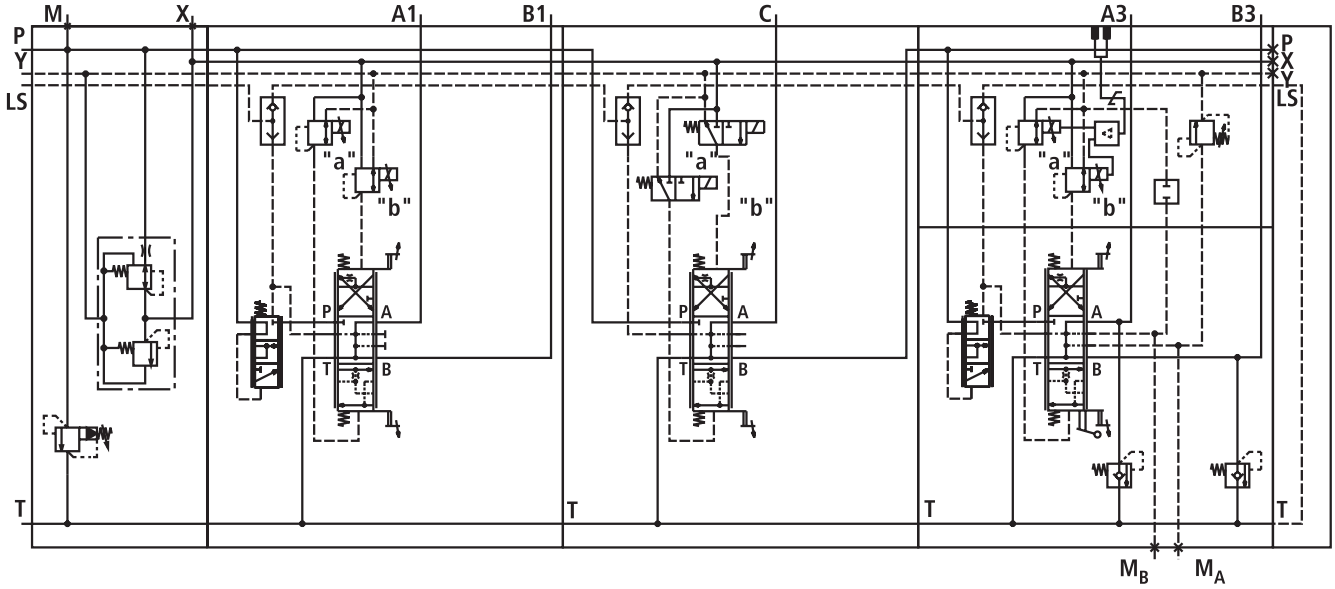

## Order example of Open Center with lateral inlet element

**Example:**
— 3-fold control block
— Fixed displacement pump $q_{V\,max}$ = 150 l/min

**Number of directional valves, inlet element**
- Open Center with lateral primary pressure relief valve, set to 300 bar
- Internal pilot oil supply

**Directional valve elements**

**1st spool axis**
- Without pressure compensator, with load holding function
- With LS pressure relief valve for actuator port A 250 bar and LS unloading plug in B
- Spool symbol E, flow in A and B 50 l/min
- Type of actuation: mechanical, spring-centred, not encapsulated, with tongue
- Secondary valves: adjustable shock/anti-cavitation valve for actuator port A 230 bar, secondary valve bore B plugged

**2nd spool axis**
- Without pressure compensator, without load holding function
- With 1 LS pressure relief valve for actuator port A and B 275 bar
- Spool symbol E, flow in A and B 100 l/min
- Type of actuation: hydraulic
- Secondary valve: non-adjustable shock/anti-cavitation valve for actuator port A 100 bar, adjustable shock/anti-cavitation valve for actuator port B 230 bar

**3rd spool axis**
- With pressure compensator, with load holding function
- Without LS pressure relief valves (cannot be retrofitted)
- Spool symbol J, flow in A and B 70 l/min
- Type of actuation: electro-hydraulic switchable, with damping orifices, with measuring ports
- With DT04-2P plug (Deutsch) 24 V
- Hand lever cover, not following, without hand lever
- Without secondary valves (cannot be retrofitted)

**End element**
- Without internal LS unloading, with LS port, with P and T port FKM seals, pipe thread connections

**Ordering code:**

| | | | | | | | | | |
|---|---|---|---|---|---|---|---|---|---|
| 3 | M4 | – | 12 | – | 2X | / | P300 | | Y |

1st spool axis

| | | | | | | | |
|---|---|---|---|---|---|---|---|
| C | 250MB | E | 050-050 | A | Z | A230 | Q |

2nd spool axis

| | | | | | | | |
|---|---|---|---|---|---|---|---|
| Q | = M275 | E | 100-100 | H | – | H100 | A230 |

3rd spool axis

| | | | | | | | | |
|---|---|---|---|---|---|---|---|---|
| S | ZZZ | J | 070-070 | W7 | 8 | X | Z | Z |

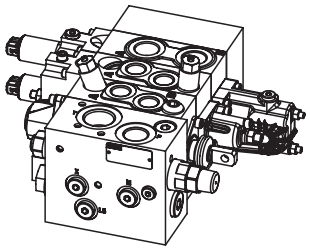

End element

| | | |
|---|---|---|
| LZPT | V | 01 |

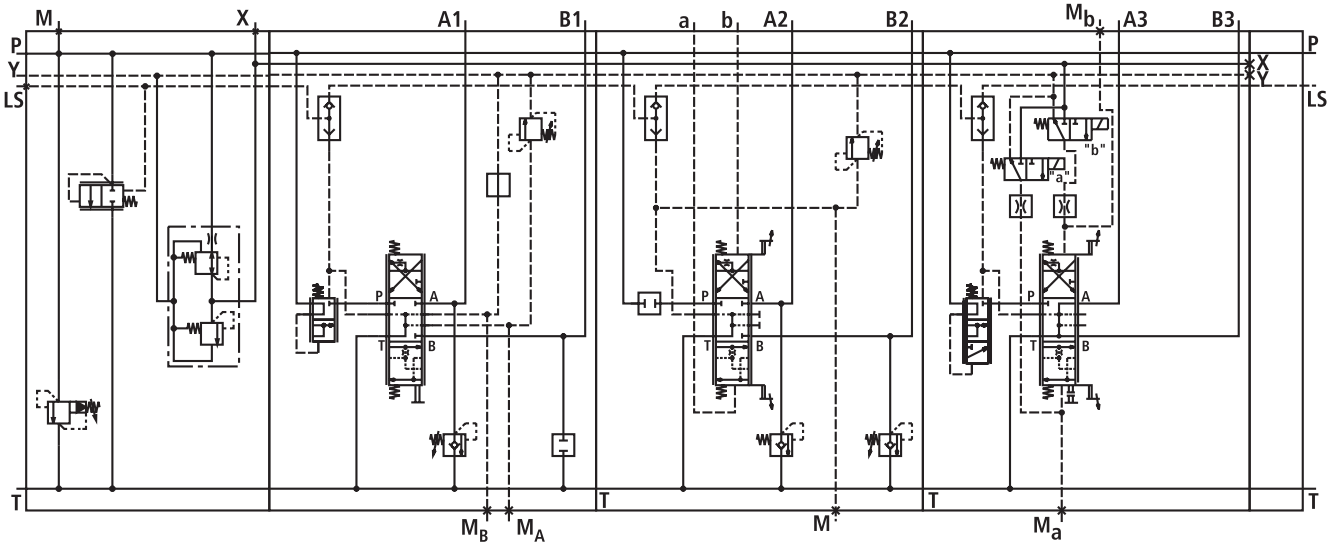

## Order example of Closed Center for central inlet with primary valve

**Example:**
— 2-fold control block
— Variable displacement pump $q_{V\,max}$ = 200 l/min

**Number of directional valves, end element**
- Diversion plate

**Directional valve element**

**1st spool axis**
- With pressure compensator, with load holding function
- Without LS pressure relief valves (cannot be retrofitted)
- Spool symbol E, flow in A and B 100 l/min
- Type of actuation: electro-hydraulic proportional with measuring ports on both sides
- With Junior Timer 2-pin (AMP) 24 V
- Actuation by means of hand lever (following)
- Secondary valve bores plugged

**Inlet element**
- Primary pressure relief valve set to 300 bar
- With internal pilot oil supply

**Directional valve element**

**2nd spool axis**
- With pressure compensator, with load holding function
- With LS pressure relief valves, actuator port A 270 bar, actuator port B 300 bar
- With electroprop. pressure relief function, 210 bar (falling characteristic curve)
- Spool symbol E, flow in A and B 90 l/min
- Type of actuation: digital OBE (analogue)
- Overriding hand lever (following)
- Secondary valve bores plugged

**End element, supplementary details**
- With internal LS unloading, FKM seals, pipe thread connections

**Ordering code:**

| | |
|---|---|
| 2 | M4 – 12 – 2X / LU |

1st spool axis

| | | | | | | | | |
|---|---|---|---|---|---|---|---|---|
| S | ZZZ | E | 100-100 | W6 | 1 | K | Q | Q |

Inlet element

| | | |
|---|---|---|
| JZ | 300 | Y |

2nd spool axis

| | | | | | | | | |
|---|---|---|---|---|---|---|---|---|
| S | 270L300 | E | 090-090 | AAQ | K | Q | Q | KBPSL8BA |

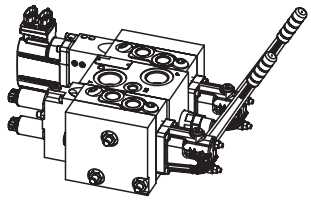

End element

| | | |
|---|---|---|
| LA | V | 01 |

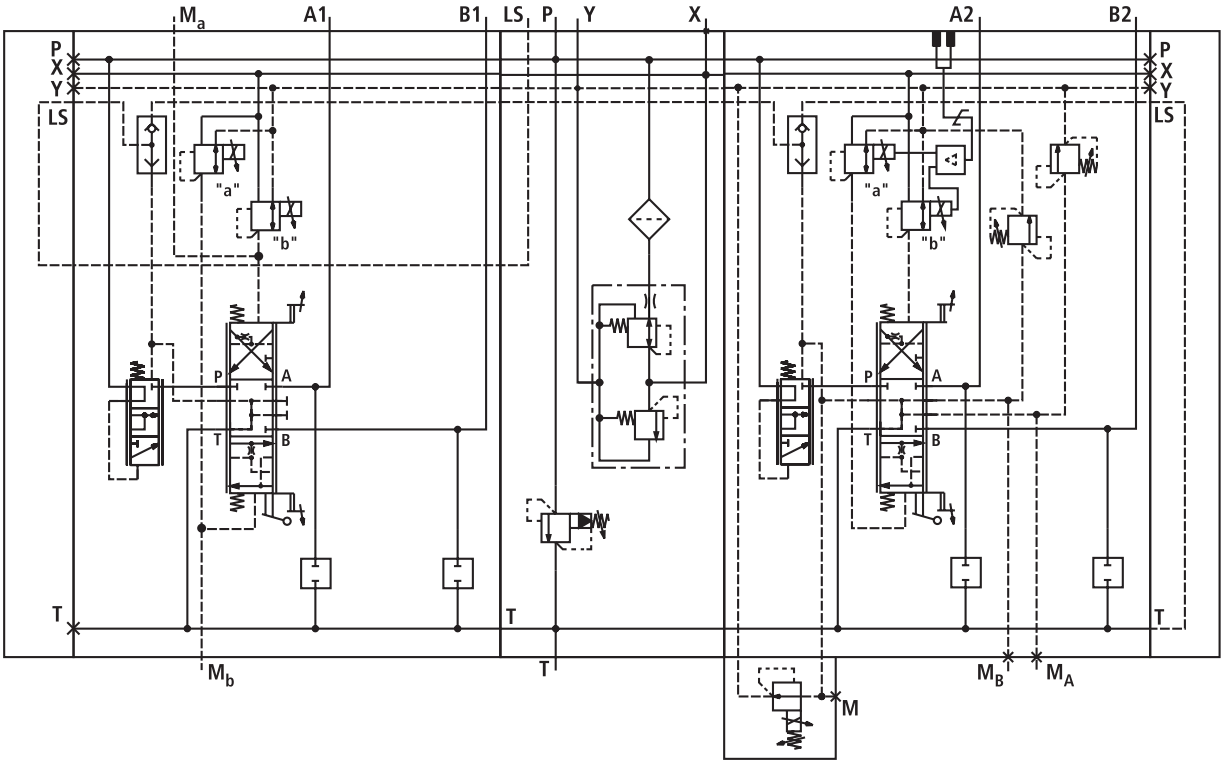

## Inlet elements J (Closed Center)

**Closed Center without primary pressure relief valve, for external pilot oil supply**

**Ordering code:**

| M4 – 12 – 2X / | J | Q | X |
|---|---|---|---|

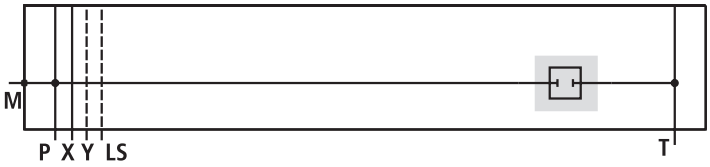


**Short description**

- For variable displacement pumps up to 150 l/min

**Closed Center with primary pressure relief valve, for external pilot oil supply**

**Ordering code:**

| M4 – 12 – 2X / | J | … | X |
|---|---|---|---|

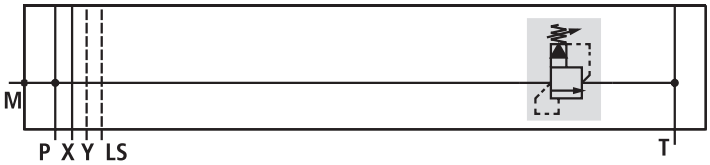


**Short description**

- For variable displacement pumps up to 150 l/min
- Indication of pressure required in bar after J … (3 digits)

**Closed Center without primary pressure relief valve, with internal pilot oil supply**

**Ordering code:**

| M4 – 12 – 2X / | J | Q | Y |
|---|---|---|---|

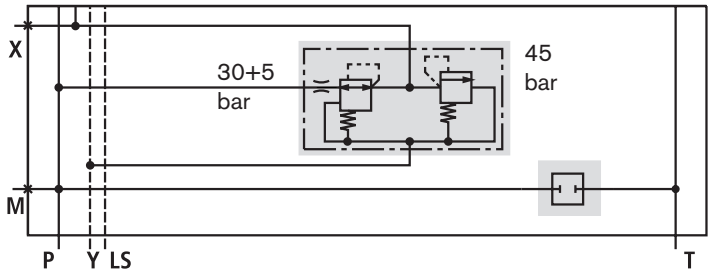


**Short description**

- For variable displacement pumps up to 150 l/min

**Closed Center with primary pressure relief valve, with internal pilot oil supply**

**Ordering code:**

| M4 – 12 – 2X / | J | … | Y |
|---|---|---|---|

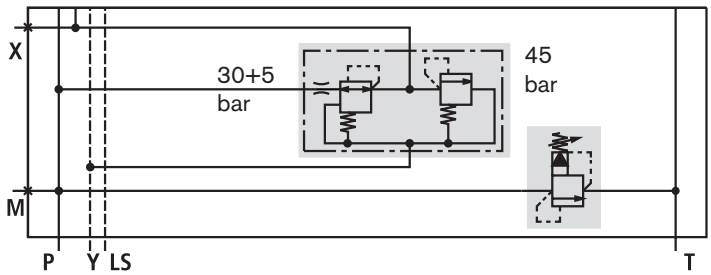


**Short description**

- For variable displacement pumps up to 150 l/min
- Indication of pressure required in bar after J… (3 digits)

**Pilot oil supply (Y)**

- Pressure relief function 45 bar
- Pilot pressure max. 30 + 5 bar

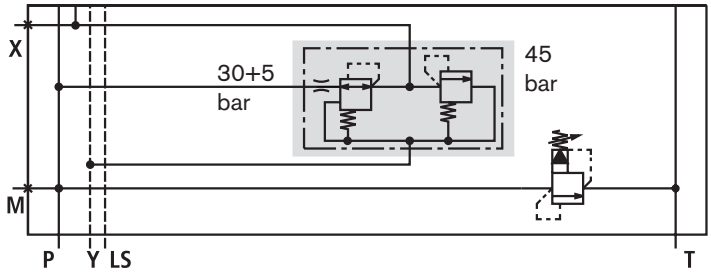


☞ **Caution!**

In the case of internal pilot oil supply, pilot oil for other actuators can also be taken via the X port. This can, however, have an influence on the switching times on the M4-12. Consult the technical sales department with regard to possible effects.

In the case of external pilot oil supply, port X“ is generally not plugged. It must be plugged when not used (e.g. hydraulic control “H“).

## Inlet elements J (Closed Center)

**LS shut-off**

**Ordering code:**

| M4 – 12 – 2X / | J | Q | Y | A |
|---|---|---|---|---|

**Short description**

- In the de-energised state, the LS line is connected by means of the Y-line to the tank
- All downstream M4-12 sections remain in the load-holding mode

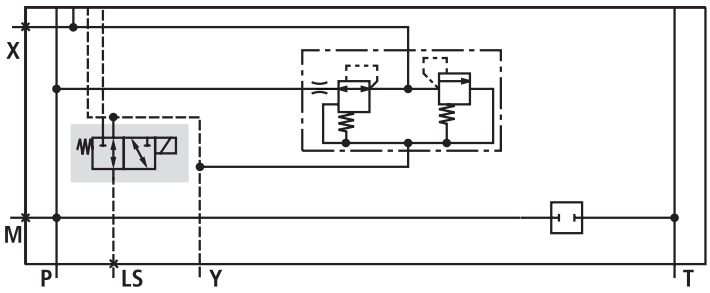


## Inlet elements P (Open Center)

**Open Center with primary pressure relief valve, for external pilot oil supply**

**Ordering code:**

| M4 – 12 – 2X / | P | … | X |
|---|---|---|---|

**Short description**

- For fixed displacement pumps up to 150 l/min
- Pressure indication required in bar after P … (3 digits)

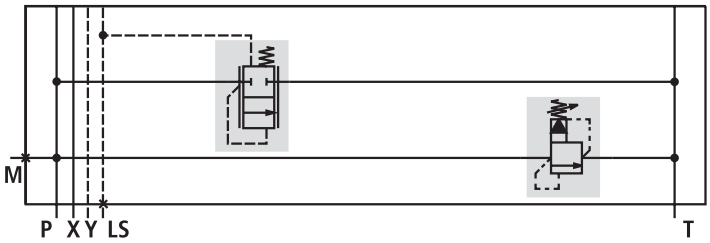


**Open Center with primary pressure relief valve, with internal pilot oil supply**

**Ordering code:**

| M4 – 12 – 2X / | P | … | Y |
|---|---|---|---|

**Short description**

- For fixed displacement pumps up to 150 l/min
- Pressure indication required in bar after P … (3 digits)

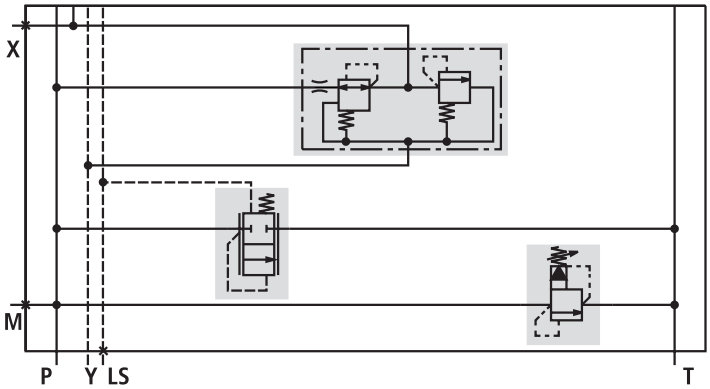


**LS shut-off**

**Ordering code:**

| M4 – 12 – 2X / | P | … | Y | A |
|---|---|---|---|---|

**Short description**

- In the de-energised state, the LS line is connected by means of the Y-line to the tank
- All downstream M4-12 sections remain in the load-holding mode

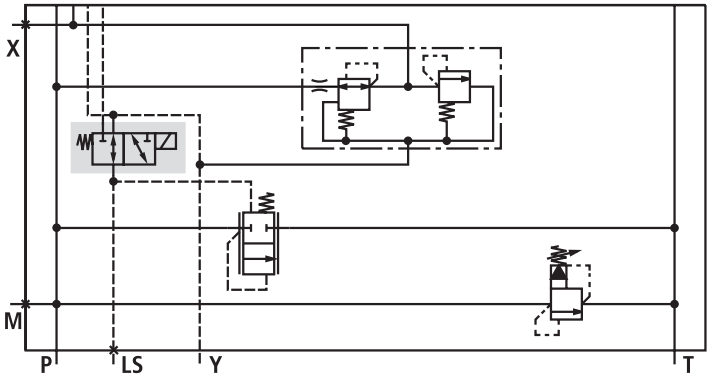

## Inlet elements JZ (central)

**Closed Center without primary pressure relief valve, with internal pilot oil supply**

**Ordering code:**

| M4 – 12 – 2X / | JZ | Q | Y |
|---|---|---|---|

**Short description**

- For variable displacement pumps up to 200 l/min

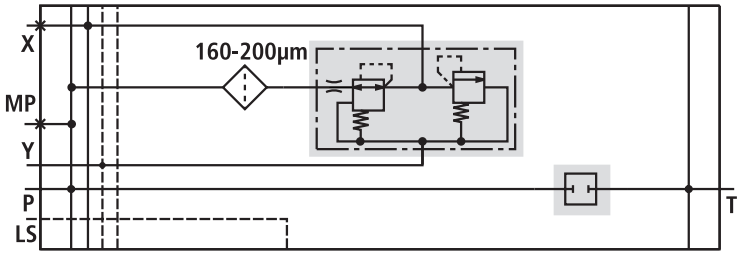


**Closed Center without primary pressure relief valve, for external pilot oil supply**

**Ordering code:**

| M4 – 12 – 2X / | JZ | Q | X |
|---|---|---|---|

**Short description**

- For variable displacement pumps up to 200 l/min

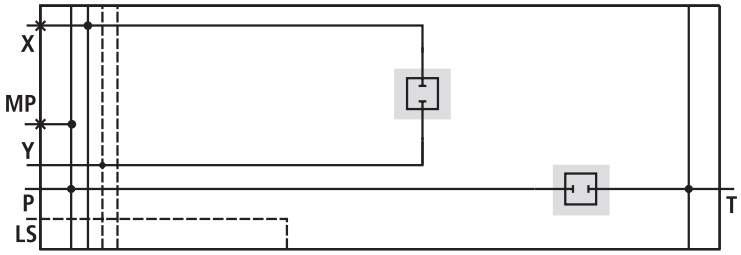


**Closed Center with primary pressure relief valve, with internal pilot oil supply**

**Ordering code:**

| M4 – 12 – 2X / | JZ | … | Y |
|---|---|---|---|

**Short description**

- For variable displacement pumps up to 200 l/min
- Pressure indication required in bar after JZ … (3 digits)

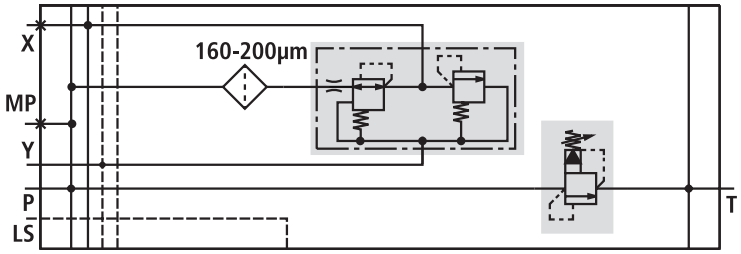


**Closed Center with primary pressure relief valve, for external pilot oil supply**

**Ordering code:**

| M4 – 12 – 2X / | JZ | … | X |
|---|---|---|---|

**Short description**

- For variable displacement pumps up to 200 l/min
- Pressure indication required in bar after JZ … (3 digits)

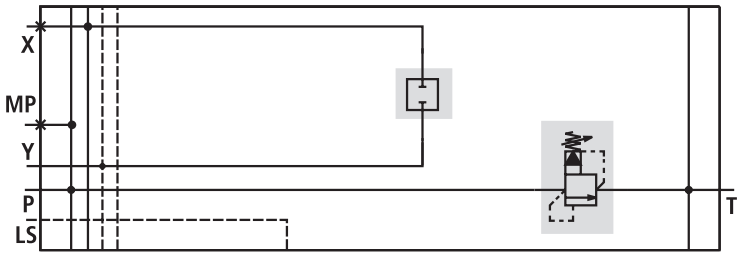


**Closed Center without primary pressure relief valve, with internal pilot oil supply**

**Ordering code:**

| M4 – 12 – 2X / | JZ | Z | Y |
|---|---|---|---|

**Short description**

- For variable displacement pumps up to 200 l/min
- Primary pressure relief valve cannot be retrofitted

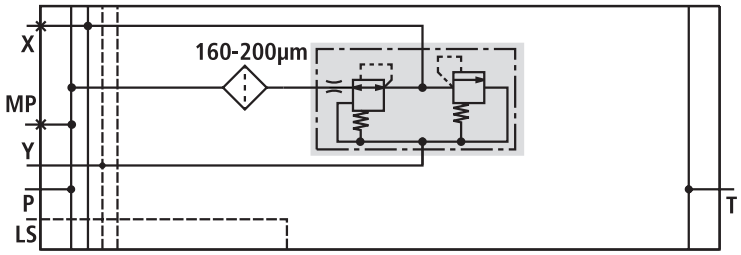


**Closed Center without primary pressure relief valve, for external pilot oil supply**

**Ordering code:**

| M4 – 12 – 2X / | JZ | Z | X |
|---|---|---|---|

**Short description**

- For variable displacement pumps up to 200 l/min
- Primary pressure relief valve cannot be retrofitted

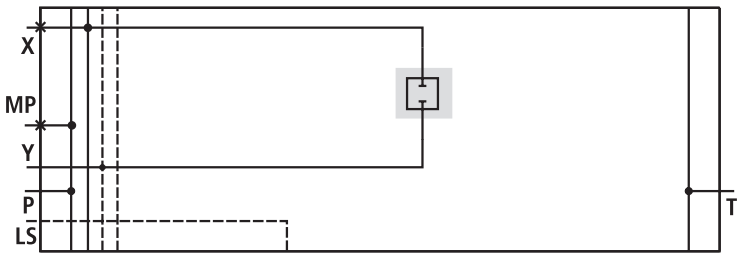

## Inlet elements JK (central)

**For the connection of directional valve elements of sizes 12 and 15**

**Closed Center without primary pressure relief valve, with internal pilot oil supply**

**Ordering code:**

| M4 – 12 – 2X / | JK | Q | Y |
|---|---|---|---|

**Short description**

- For variable displacement pumps up to 200 l/min

M4-12

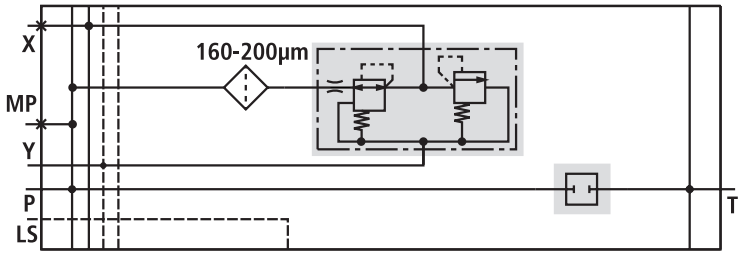


M4-15

**For the connection of directional valve elements of sizes 12 and 15**

**Closed Center without primary pressure relief valve, for external pilot oil supply**

**Ordering code:**

| M4 – 12 – 2X / | JK | Q | X |
|---|---|---|---|

**Short description**

- For variable displacement pumps up to 200 l/min

M4-12

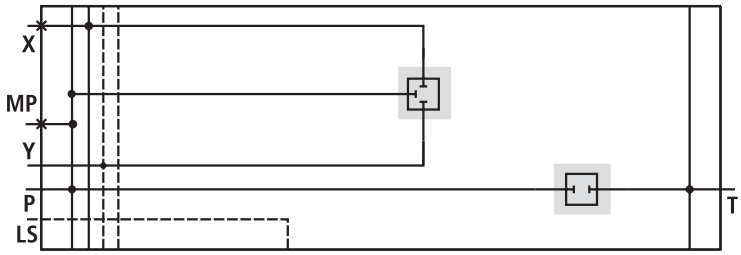


M4-15

**For the connection of directional valve elements of sizes 12 and 15**

**Closed Center with primary pressure relief valve, with internal pilot oil supply**

**Ordering code:**

| M4 – 12 – 2X / | JK | … | Y |
|---|---|---|---|

**Short description**

- For variable displacement pumps up to 200 l/min
- Pressure indication required in bar after JK …
  (3 digits)

M4-12

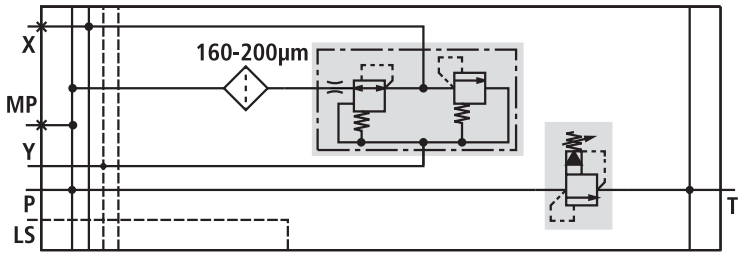


M4-15

**For the connection of directional valve elements of sizes 12 and 15**

**Closed Center with primary pressure relief valve, for external pilot oil supply**

**Ordering code:**

| M4 – 12 – 2X / | JK | … | X |
|---|---|---|---|

**Short description**

- For variable displacement pumps up to 200 l/min
- Pressure indication required in bar after JK …
  (3 digits)

M4-12

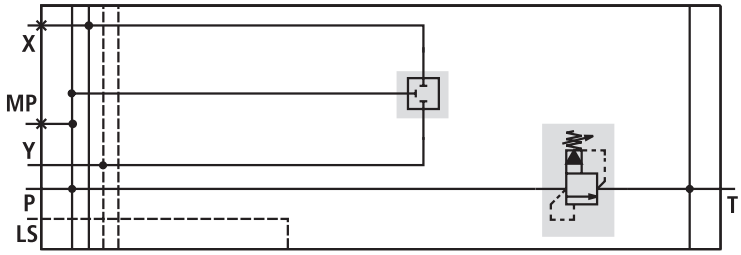


M4-15

## Directional valve elements: Main spools

**Spool characteristic curves (symmetric spools)**

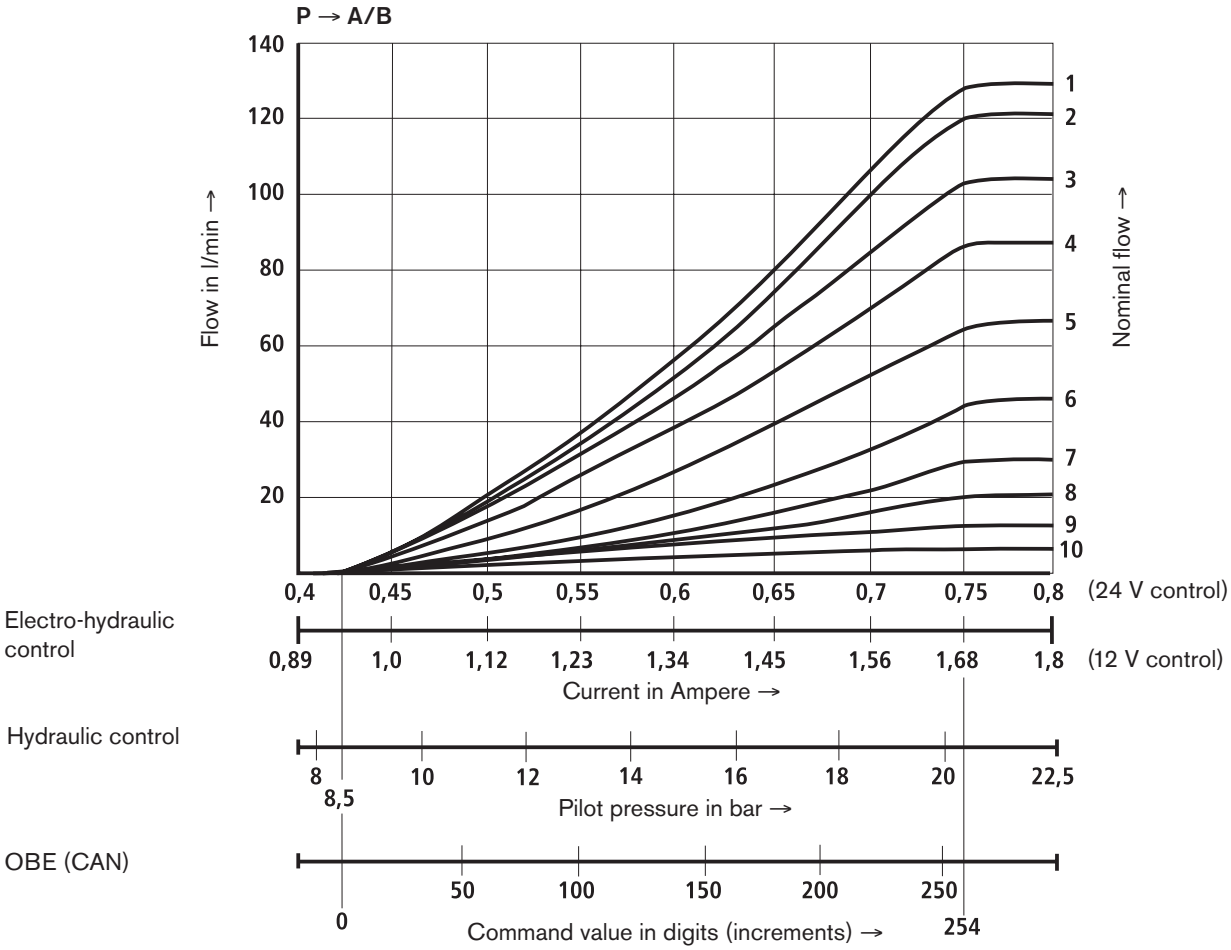

## Directional valve elements: Main spools

**Main spool variants**

| Ordering code<br>Flow in l/min | Main application | Symbol |
|---|---|---|
| E … – … | Hydraulic cylinders as actuators | 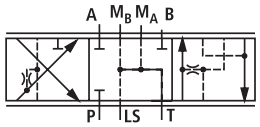 |
| J … – … | Hydraulic motors as actuators | 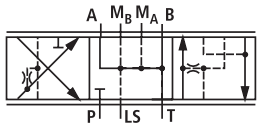 |
| Q … – … | Application with defined residual opening (A/B → T)<br>Actuator port unloaded in neutral position | 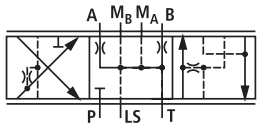 |
| R … – … | Regeneration function<br>(P, B → A) | 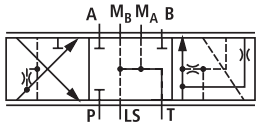 |
| W … – … | Float position | 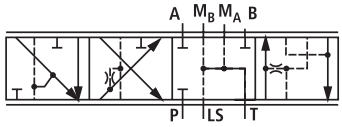 |
| P … – … | Plunger cylinders as actuators | 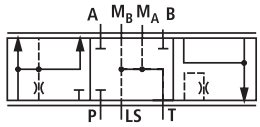 |
| (E, J, Q) … T … | Spool with pressure function | 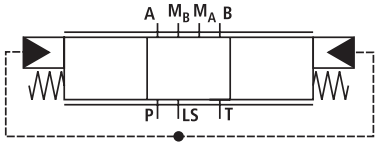 |

## Directional valve elements: Pressure compensator

**Flow control by means of pressure compensator**

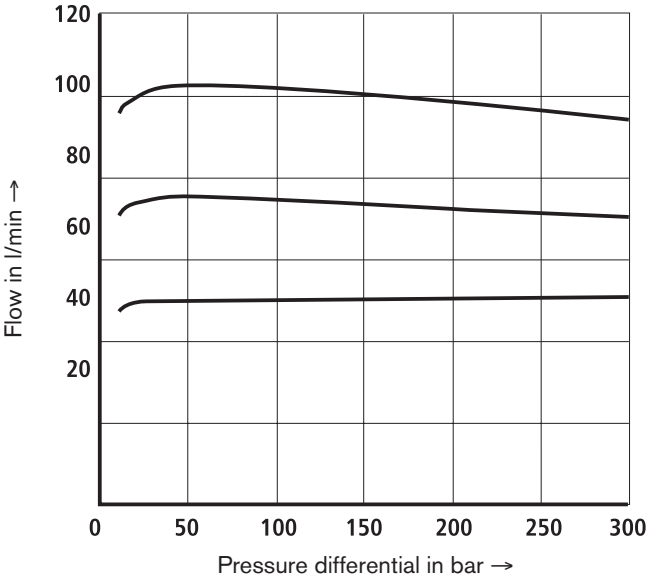


In the central position of the main spool, there is no connection from P to actuator ports A and B. In this operational state, pressure compensator spool (1) is shifted by the pump pressure to the left against spring (2).

When main spool (3) (= metering orifice) is operated, the LS pressure is fed to spring chamber (4) and shifts the pressure compensator spool to the right to the control position. The flow is kept constant, even in the case of actuators operating in parallel at different load pressures.

Pressure compensator "S" is provided with a load holding function. This function is not leak-free.

As a standard, it is equipped with one washer (5). The number of washers to be inserted depends on the required flow.

**Central position of the main spool**

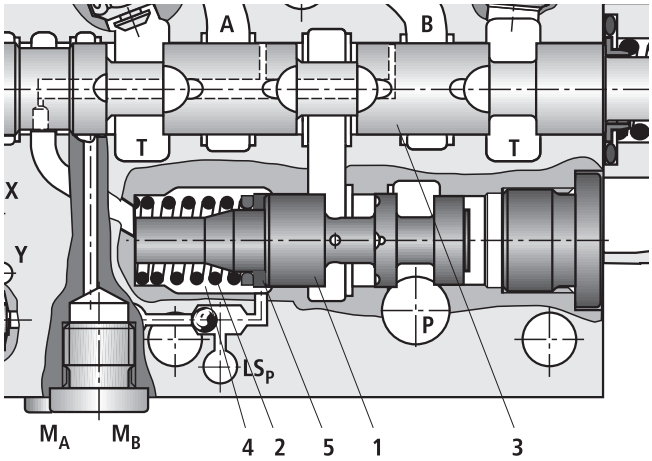


**Operation of the main spool**

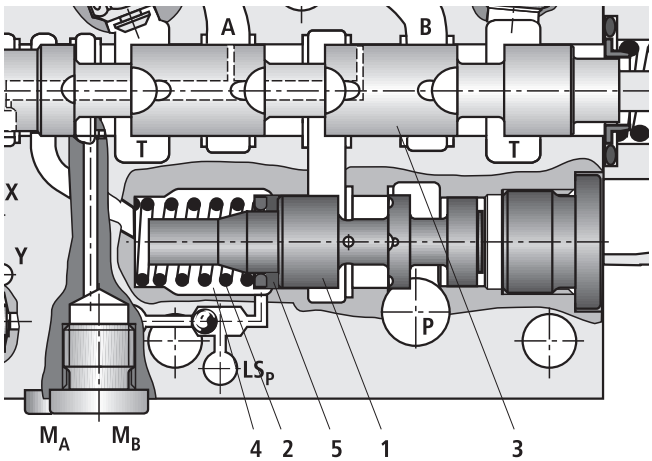


**Pressure compensator spool variants**

| Ordering code | Short description | Symbol |
|---|---|---|
| S | • With pressure compensator<br>• With load holding function [1)]<br>• Max. flow 130 l/min | 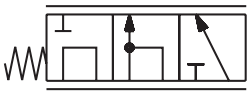 |
| C | • Without pressure compensator<br>• With load holding function [1)]<br>• Max. flow 140 l/min | 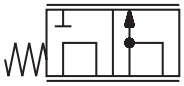 |
| Q | • Without pressure compensator<br>• Without load holding function<br>• Max. flow 140 l/min | |

[1)] The load holding function is not leak-free.

## Directional valve elements: Pressure compensator

### Flow

| Symmetric spools | | | | | | | | | |
|---|---|---|---|---|---|---|---|---|---|
| Spool type | Pressure compen-sator | Flow in l/min (for spool characteristic curve, see page 18) | | | | | | | |
| E, J, Q | S | 130–130 (1) | 100–100 | 073–073 | 052–052 | 034–034 | 023–023 | 014–014 | 007–007 |
| | | 120–120 (2) | 085–085 (4) | 065–065 (5) | 045–045 (6) | 030–030 (7) | 020–020 (8) | 012–012 (9) | 006–006 (10) |
| | | 110–110 (3) | 070–070 | 057–057 | 038–038 | 026–026 | 017–017 | 010–010 | 005–005 |
| | C | 140–140 | 115–115 | 090–090 | 063–063 | 042–042 | 028–028 | 017–017 | 008–008 |
| **Asymmetric spools** | | | | | | | | | |
| Spool type | Pressure compen-sator | Flow in l/min | | | | | | | |
| E, J, Q | S | | 100–073 | 100–052 | 052–034 | 034–023 | 023–014 | | |
| | | | 085–065 | 085–045 | 045–030 | 030–020 | 020–012 | | |
| | | | 070–057 | 070–038 | 038–026 | 026–017 | 017–010 | | |
| | C | | 115–090 | 115–063 | 063–042 | 042–028 | 028–017 | | |
| **Float position, regeneration and plunger spool** | | | | | | | | | |
| Spool type | Pressure compen-sator | Nominal flow in l/min (others on enquiry) | | | | | | | |
| W | S | | | 074–045 | 030–030 | | | | |
| R | S | 130–101 | 085–030 | 065–025 | | | | | |
| P | S | 140–000 | | | | | | | |

☞ **Note**!

Please consult the technical sales department.

**Example:**

- Spool type J
- Pressure compensator S
- Desired value: $q_{v\ actuator}$ = 90 l/min

**Solution:**

→ 85-litre spool + 2 sections = 100 l/min

→ Set 90 litres by means of stroke limiter.

| Spool type | Pressure compen-sator | Flow in l/min |
|---|---|---|
| E, J, Q | S | 100–100 |
| | | 085–085 |
| | | 070–070 |

Flow without washer (pressure compensator Δp = 6 to 9 bar) ←

Flow with 1 washer (pressure compensator Δp = 7.5 to 10 bar) ←

Flow with 2 washers (pressure compensator Δp = 9 to 12 bar) ←

☞ **Note**!

Position directional valve elements with maximum flow as closely as possible to the inlet element.

## Directional valve elements: LS pressure relief function

**Characteristic curves**

**Reduction of actuator flow by means of LS pressure relief function**

Minimum setting: 50 bar

Maximum setting : 330 bar

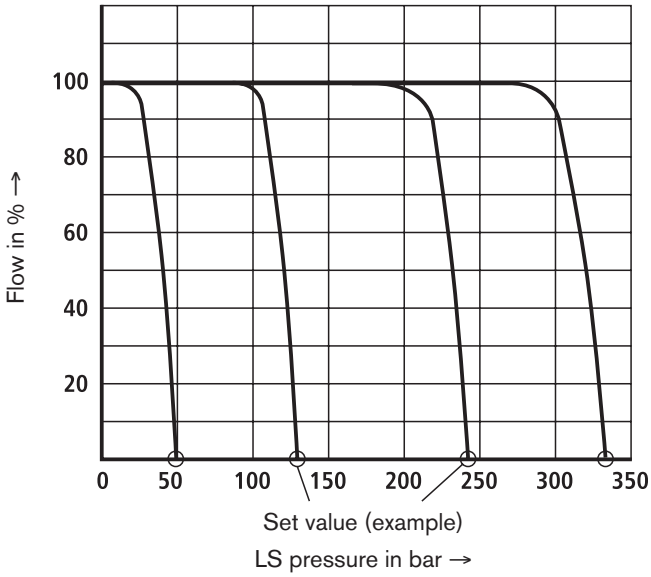


**With LS pressure relief valve and LS plug screw**

**Ordering code:**

| | | | | | | | | | | |
|---|---|---|---|---|---|---|---|---|---|---|
| S | … | M | Q | J | …–… | W2 | 1 | – | H… | H… |

**Short description**

- Pressure indication in bar for actuator port A (3 digits)
- Plug screw for actuator port B
- With version “QMQ“ the LS pressure relief function can be retrofitted to the directional valve element.
- The LS pressure can be externally influenced via ports $M_A$ and $M_B$. These ports can also be used as measuring ports.

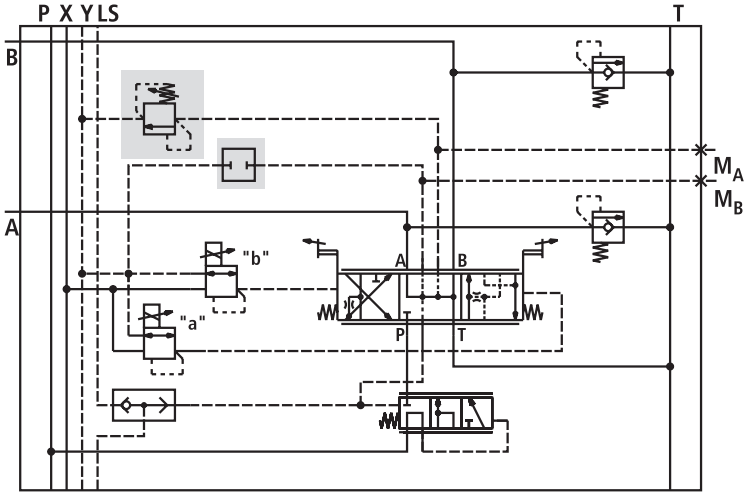


**With LS pressure relief valve and unloading plug**

**Ordering code:**

| | | | | | | | | | | |
|---|---|---|---|---|---|---|---|---|---|---|
| S | … | M | B | E | …–… | W2 | 1 | – | H… | H… |

**Short description**

- Pressure indiation in bar for actuator port A (3 digits)
- Unloading plug for actuator port B
- E.g. for cylinders with one-sided operation

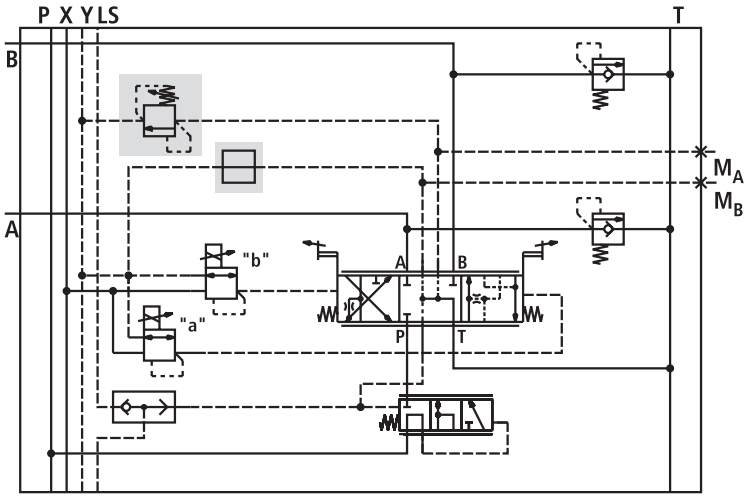

## Directional valve elements: LS pressure relief function

**With only 1 LS pressure relief valve**

**Ordering code:**

| | | | | | | | | |
|---|---|---|---|---|---|---|---|---|
| S | = M … | J | …–… | W2 | 1 | – | H… | H… |

**Short description**

- Only 1 LS DB for identical pressure setting in A and B
- 1 measuring port

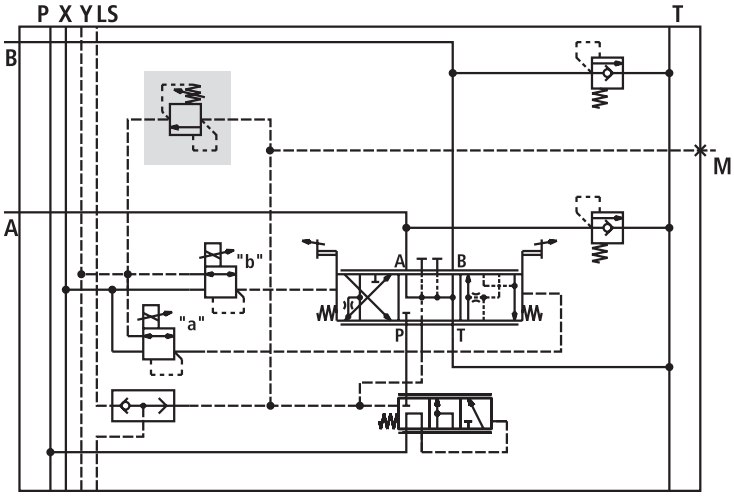


**Without LS pressure relief valve**

**Ordering code:**

| | | | | | | | | |
|---|---|---|---|---|---|---|---|---|
| S | Z Z Z | J | …–… | W2 | 1 | – | H… | H… |

**Short description**

- LS DB cannot be retrofitted
- Housing without measuring ports

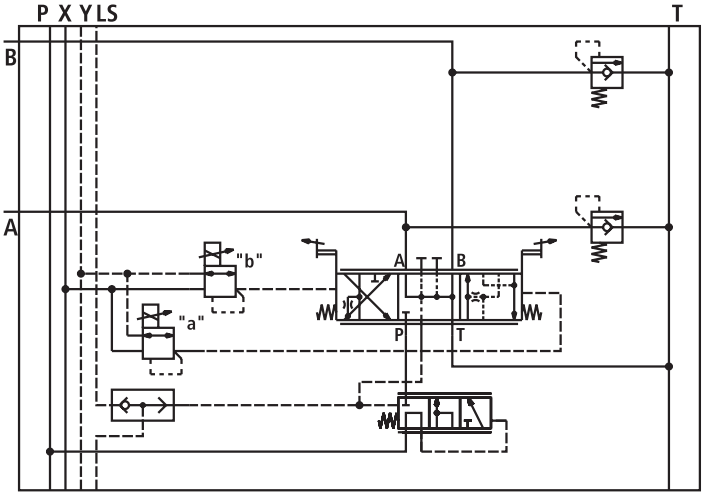


**Housing for change-over axis**

**Ordering code:**

| | | | | | | | | |
|---|---|---|---|---|---|---|---|---|
| Z | Z U Z | J | …–… | W4 | 1 | K | Z | Z |

**Short description**

- Housing for change-over axis

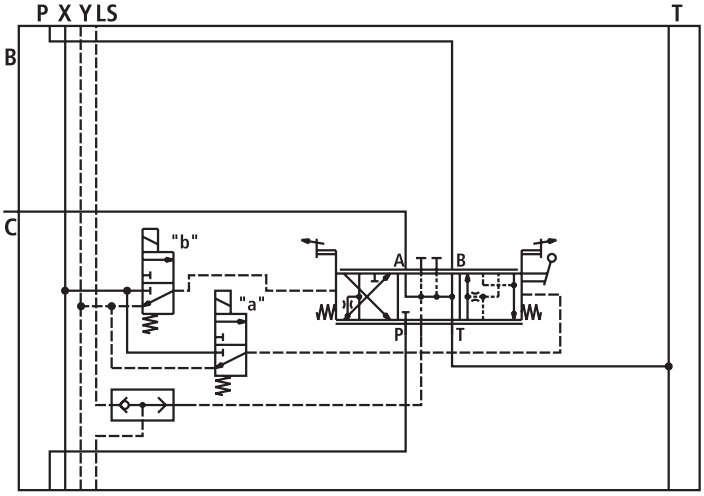

## Directional valve elements: Electro-proportional or switchable LS pressure relief function

**Housing for electro-proportional pressure relief function**

**Short description**

- Distinction between:
  1. Type KBPS – electro-hydraulic proportional
  2. Type KKDE – electro-hydraulic switchable
  3. Porting pattern KBPS and cover plate
  4. Housing KBPS and plug
- The detailed designation of the valve must be indicated in **clear text** as follows

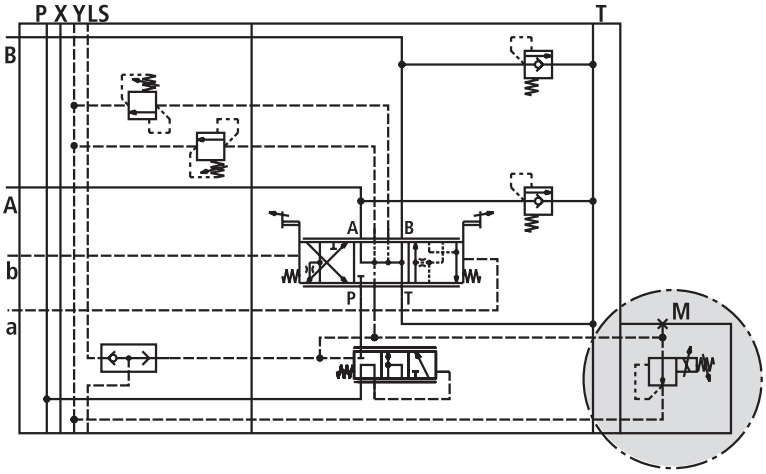


**1. Electro-proportional pressure relief valve type KBPS** (see also data sheets RE 18139-04/06.05; RE 18139-5/06.05)

**Standard product range:**

| | | | | | | | | |
|---|---|---|---|---|---|---|---|---|
| S | … R … | J | …–… | H | – | H… | H… | KBPSR8BA |
| S | … L … | J | …–… | H | – | H… | H… | KBPSL8BA |
| S | … N … | J | …–… | H | – | H… | H… | KBPSR8AA |
| S | … J … | J | …–… | H | – | H… | H… | KBPSL8AA |

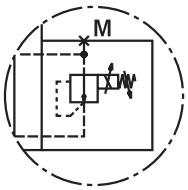


KBPS…BA:
falling characteristic curve

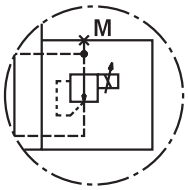


KBPS…AA:
rising characteristic curve

**Supplementary product range, e.g.:**

| | | | | | | | | | |
|---|---|---|---|---|---|---|---|---|---|
| S | … K … | J | …–… | H | – | H… | H… | KBPSH8BA | -033 |

**Pressure control by means of electro-proportional LS pressure relief function**

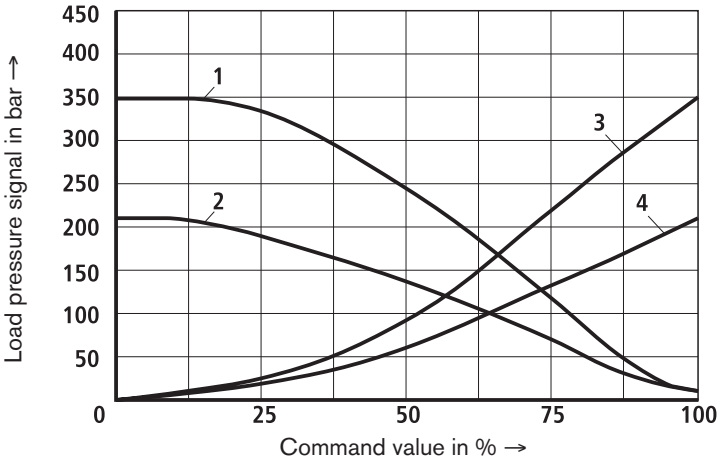


| | Falling characteristic curve | Rising characteristic curve | Supplement SO no. (Option: 24 V; 0.8 A) |
|---|---|---|---|
| 50 bar | KBPS**C**8BA | KBPS**C**8AA | -033 |
| 100 bar | KBPS**F**8BA | KBPS**F**8AA | |
| 150 bar | KBPS**H**8BA | KBPS**H**8AA | |
| 210 bar | KBPS**L**8BA (2) | KBPS**L**8AA (4) | |
| 250 bar | KBPS**N**8BA | KBPS**N**8AA | |
| 315 bar | KBPS**P**8BA | KBPS**P**8AA | |
| 350 bar | KBPS**R**8BA (1) | KBPS**R**8AA (3) | |
| 420 bar | KBPS**T**8BA | KBPS**T**8AA | |

= standard product range

## Directional valve elements: Electro-proportional or switchable LS pressure relief function

**Technical data KBPS (see also RE 18139-04/06.05)**

| **Electrical** | | | **Standard** | |
|---|---|---|---|---|
| Supply voltage | | V | 12 DC | 24 DC |
| Maximum control current | | mA | Max. nominal current 1760 mA | Max. nominal current 1200 mA |
| Coil resistance | – Cold value at 20°C | Ω | 2.3 | 4.8 |
| | – Max. hot value | Ω | 3.65 | 7.2 |
| Duty cycle | | % | 100 [1] | |
| Maximum coil temperature [2] | | °C | 150 | |
| Type of protection to VDE 0470-1 (DIN EN 60529), DIN 40050-9 | – Version “K4“ | | IP 65 with plug-in connector mounted and locked | |
| | – Version “C4“ | | IP 66 with plug-in connector mounted and locked | |
| | | | IP 69K with Rexroth plug-in connector (material no. R901022127) | |
| | – Version “K40“ | | IP 69K with plug-in connector mounted and locked | |

[1] In the case of applications > 2000 m above MSL, we recommend that you consult the manufacturer.

[2] Due to the surface temperatures of solenoid coils, the European standards EN 563 and EN 982 must be observed!

## Directional valve elements: Electro-proportional and switchable LS pressure relief function

### 2. 2/2-way LS shut-off valve typ KKDE

| S | … K … | J | …–… | H | – | H… | H… | KKDER8PA |
|---|---|---|---|---|---|---|---|---|

| Normally open | Normally closed |
|---|---|
| KKDER8PA | KKDER8NA |

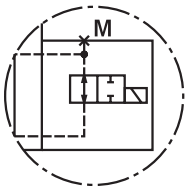


KKDE…PA:
normally open

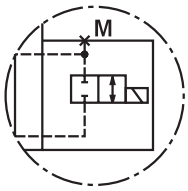


KKDE…NA:
normally closed

**Technical data KKDE (see also RE 18136-08/05.05)**

| Electrical | | | Standard | |
|---|---|---|---|---|
| Type of voltage | | | DC voltage | |
| Supply voltage | | V | 12 DC | 24 DC |
| Voltage tolerance and ambient temperature | | | See characteristic curve, RE 18136-08 on page 5 | |
| Power consumption | | Ω | 22 | |
| Duty cycle | | % | See characteristic curve, RE 18136-08 on page 5 | |
| Maximum coil temperature [2] | | °C | 150 | |
| Switching time to ISO 6403 (solenoid horizontal) | – ON | ms | ≤ 80 | |
| | – OFF | ms | ≤ 150 | |
| Maximum switching frequency | | s/h | 15000 | |
| Type of protection to VDE 0470-1 (DIN EN 60529), DIN 40050-9 | – Version “K4“ | | IP 65 with plug-in connector mounted and locked | |
| | – Version “C4“ | | IP 66 with plug-in connector mounted and locked | |
| | | | IP 69K with Rexroth plug-in connector (material no. R901022127) | |
| | – Version “K40“ | | IP 69K with plug-in connector mounted and locked | |

[1] In the case of applications > 2000 m above MSL, we recommend that you consult the manufacturer.

[2] Due to the surface temperatures of solenoid coils, the European standards EN 563 and EN 982 must be observed!

**When establishing the electrical connection of “K4“ properly connect the protective earth conductor (PE ⏚).**

☞ **Note!**

The actuator pressure will not be reduced to zero!

### 3. Porting pattern of KBPS and cover plate

| S | … K … | J | …–… | H | – | H… | H… | A |
|---|---|---|---|---|---|---|---|---|

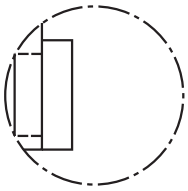

Cover plate

### 4. Housing KBPS and plug

| S | … K … | J | …–… | H | – | H… | H… | Q |
|---|---|---|---|---|---|---|---|---|

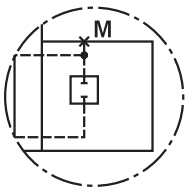


Plug

## Directional valve elements: Secondary valves

**Shock/anti-cavitation valves, non-adjustable**

**Ordering code:**

| | | | | | | | | |
|---|---|---|---|---|---|---|---|---|
| S | … M … | J | …–… | W2 | 1 | – | H100 | H150 |

**Short description**

- Non-adjustable shock/anti-cavitation valve
- Pressure indication required in bar after H … (3 digits)
- **Example: H100, H150**
  H100: Shock/anti-cavitation valve, firmly set to 100 bar for actuator port A
  H150: Shock/anti-cavitation valve, firmly set to 150 bar for actuator port B
- **Caution!**
  Suitable only for reducing pressure peaks, not to be used as pressure relief valve!

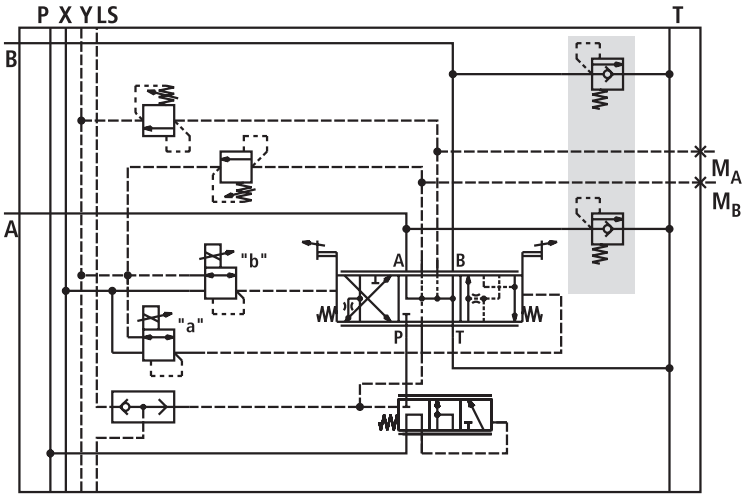


Preferred pressure settings for shock valves with anti-cavitation function (secondary valves)

☞ **Caution!** Shock valves are firmly set!

| Pressure setting in bar in actuator ports A and B | | | |
|---|---|---|---|
| H050 = 50 bar | H140 = 140 bar | H210 = 210 bar | H280 = 280 bar |
| H063 = 63 bar | H150 = 150 bar | H230 = 230 bar | H300 = 300 bar |
| H080 = 80 bar | H160 = 160 bar | H240 = 240 bar | H320 = 320 bar |
| H100 = 100 bar | H175 = 175 bar | H250 = 250 bar | H350 = 350 bar |
| H125 = 125 bar | H190 = 190 bar | | |

**Shock/anti-cavitation valves, adjustable**

**Ordering code:**

| | | | | | | | | |
|---|---|---|---|---|---|---|---|---|
| S | … M … | J | …–… | W2 | 1 | – | Q | A… |

**Short description**

- Adjustable shock/anti-cavitation valve
- Pressure indication required in bar after A … (3 digits)
- **Example: QA200**
  Q: Plug screw for acutator side A
  A200: Shock/anti-cavitation valve, set to 200 bar for actuator port B
- The directional valve is prepared for retrofitting secondary valves

☞ **Caution!**
Suitable only for reducing pressure peaks, not to be used as pressure relief valve!

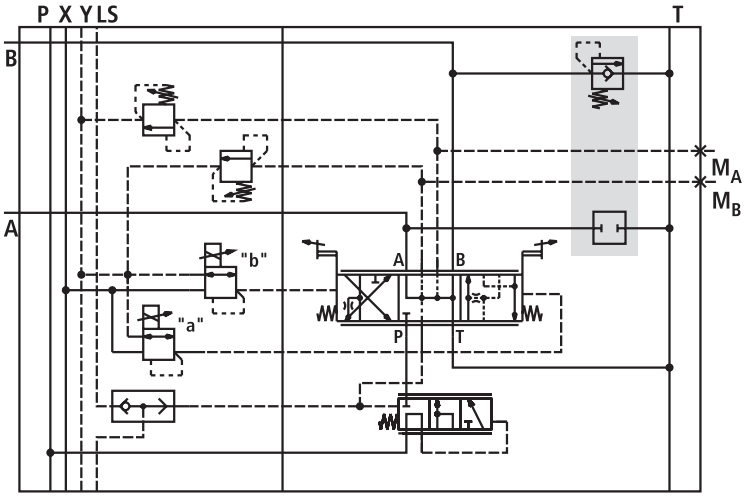


| Adjustable pressure ratings in bar in actuator ports A and B | |
|---|---|
| 10 – 70 | 201 – 270 |
| 71 – 120 | 271 – 320 |
| 121 – 200 | 321 – 380 |

## Directional valve elements: Secondary valves

**Without secondary valve**

**Ordering code:**

| | | | | | | | | |
|---|---|---|---|---|---|---|---|---|
| S | … M … | J | …–… | W2 | 1 | – | Z | Z |

**Short description**

- Secondary valves cannot be retrofitted

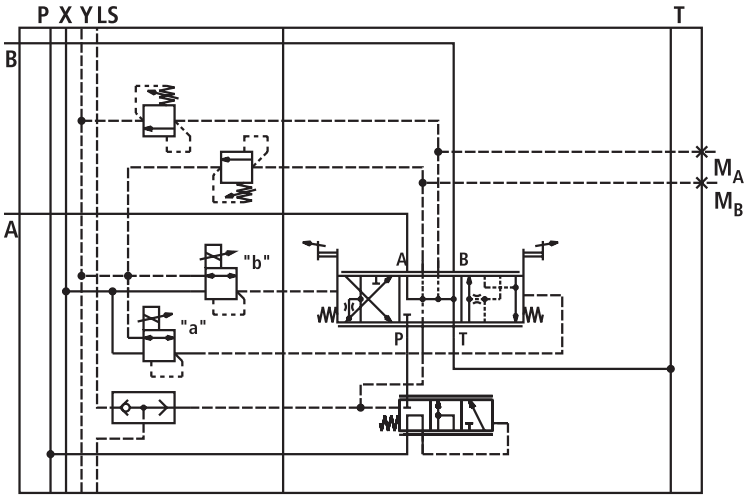

## Directional valve elements: Types of actuation – mechanical

**Mechanical - encapsulated actuation**

**Hand lever positions**

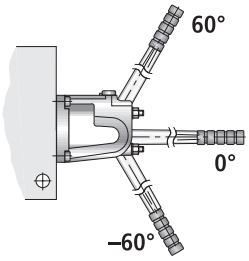


| | Upward, 60° | Straight, 0° | Downward, –60° |
|---|---|---|---|
| Hand lever, following | K | L | M |
| Hand lever, not following | N | O | P |
| Clamping piece with lever, following | B | F | D |
| Clamping piece without lever, following | T | U | V |
| Clamping piece with lever, not following | G | H | J |
| Clamping piece without lever, not following | Q | C | S |

**Actuating force (on hand lever):**

- Mechanical < 18 N
- Hydraulic, hand lever override < 45 N
- Electro-hydraulic, hand lever override < 64 N

**Mechanical - non-encaplsulated actuation**

| Spring-centred + tongue | | Spring-centred + tongue with lever | |
|---|---|---|---|
| 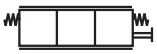 | A Z | 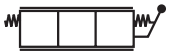 | A N |
| **Detent + tongue** | | **Detent + tongue with lever** | |
| 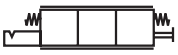 | B1 Z | 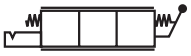 | B1 N |
| 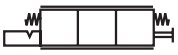 | B2 Z | 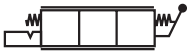 | B2 N |
| 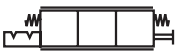 | B4 Z | 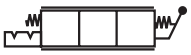 | B4 N |

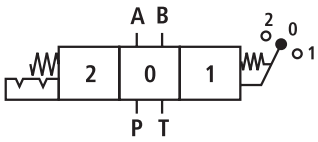


| | | |
|---|---|---|
| B1 | = | detent in 1 |
| B2 | = | detent in 2 |
| B4 | = | detent in 1, 2 |

**Actuating force:**

- Tongue < 250 N (spool axis)

☞ **Note!**

Hand lever as agreed with technical sales department.

= standard product range

## Directional valve elements: Types of actuation – mechanical

**Mechanical (not encapsulated) with tongue**

**Ordering code:**

| | | | | | | | |
|---|---|---|---|---|---|---|---|
| S | Z Z Z | J | …–… | A | Z | Z | Z |

**Short description**

- Mechanical actuation of the main spool. In the non-operated state, centring by springs in the central position

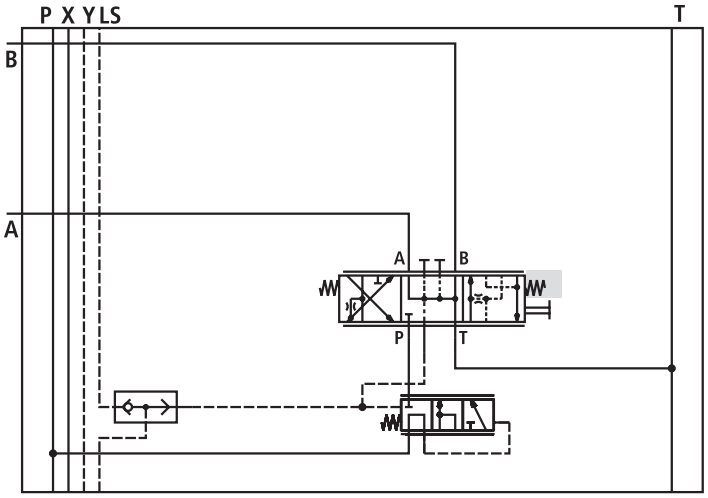


**Mechanical (not encapsulated) with hand lever and detent**

**Ordering code:**

| | | | | | | | |
|---|---|---|---|---|---|---|---|
| S | … M … | J | …–… | B1 | N | H… | H… |

**Short description**

- Mechanical actuation of the main spool. In the non-operated state, centring by springs in the central position

☞ **Note!**

Hand lever as agreed with technical sales department.

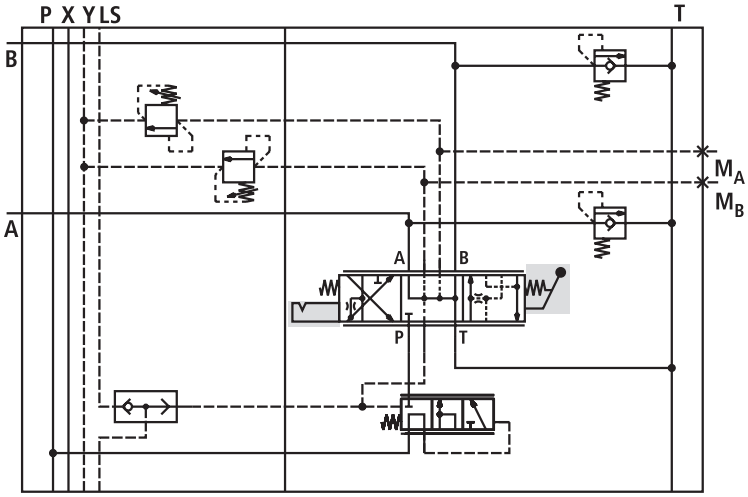


**Mechanical (encapsulated)**

**Ordering code:**

| | | | | | | | |
|---|---|---|---|---|---|---|---|
| S | … M … | J | …–… | M | K | H… | H… |

**Short description**

- Mechanical actuation of the main spool. In the non-operated state, centring by springs in the central position
- All options of hand lever positions possible (K, L, M, etc.), cf. type code on page 7
- [1] Following hand lever
- [2] Non-following hand lever

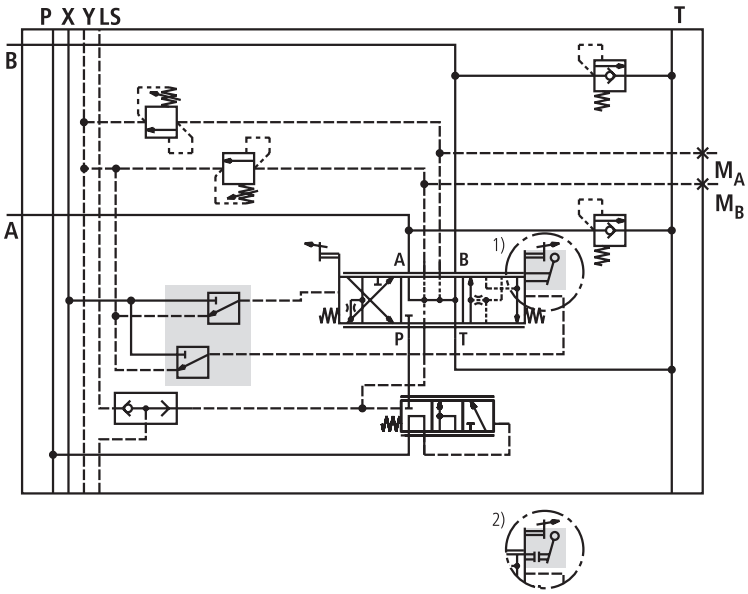

## Directional valve elements: Types of actuation – hydraulic

**Hydraulic**

**Ordering code:**

| | | | | | | | |
|---|---|---|---|---|---|---|---|
| S | … M … | J | …–… | H | – | H… | H… |

**Short description**

- Recommended hydraulic pilot control devices: Type TH6 to RE 64555

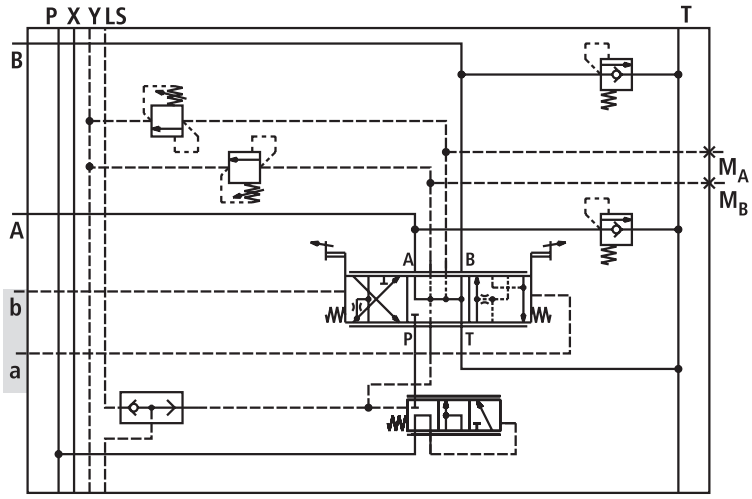

## Directional valve elements: Types of actuation – electro-hydraulic switchable

**Electro-hydraulic switchable**

**Ordering code:**

| | | | | | | | | |
|---|---|---|---|---|---|---|---|---|
| S | … M … | J | …–… | W4 | 1 | – | H… | H… |

On/off valves type FTWE 2 K to RE 58007

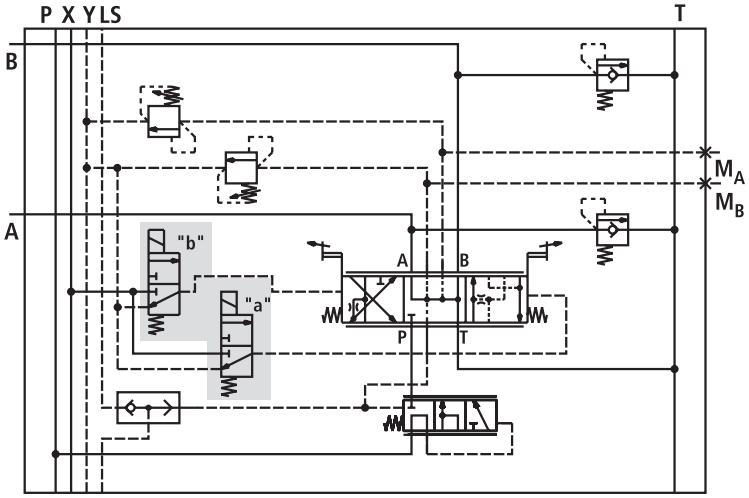


**Electro-hydraulic switchable with damping orifice at both sides**

**Ordering code:**

| | | | | | | | | |
|---|---|---|---|---|---|---|---|---|
| S | … M … | J | …–… | W5 | 3 | – | H… | H… |

On/off valves type FTWE 2 K to RE 58007

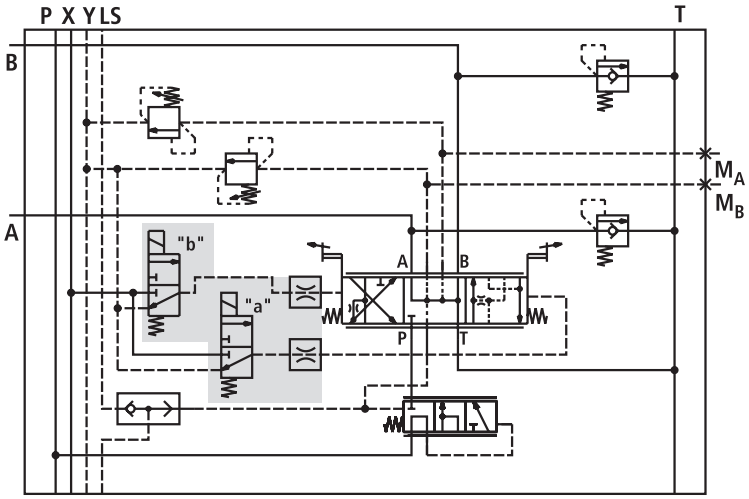


**Electro-hydraulic switchable with measuring ports at both sides**

**Ordering code:**

| | | | | | | | | |
|---|---|---|---|---|---|---|---|---|
| S | … M … | J | …–… | W8 | 3 | – | H… | H… |

On/off valves type FTWE 2 K to RE 58007

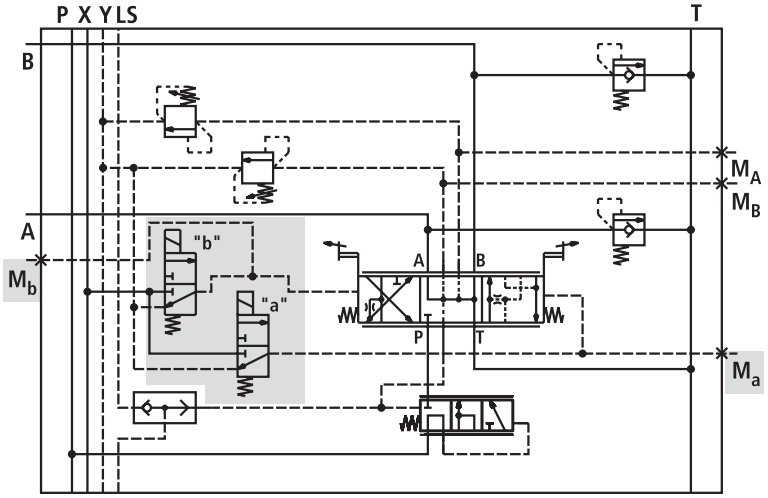

## Directional valve elements: Types of actuation – electro-hydraulic switchable

**Electro-hydraulic, switchable, with damping orifice, with measuring ports at both sides**

**Ordering code:**

| | | | | | | | | |
|---|---|---|---|---|---|---|---|---|
| S | … M … | J | …–… | W7 | 1 | – | H… | H… |

On/off valves type FTWE 2 K to RE 58007

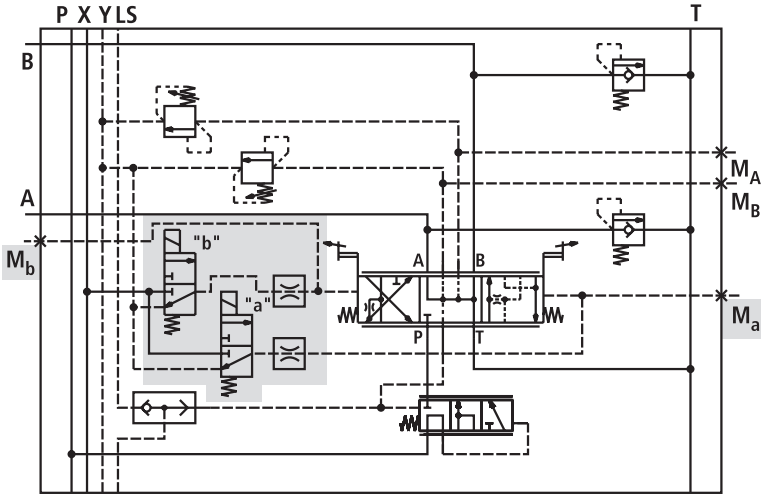


**Electro-hydraulic, switchable, with orifice and check valve for hydraulic override**

**Ordering code:**

| | | | | | | | | |
|---|---|---|---|---|---|---|---|---|
| S | … M … | J | …–… | G4 | 3 | – | H… | H… |

On/off valves type FTWE 2 K to RE 58007

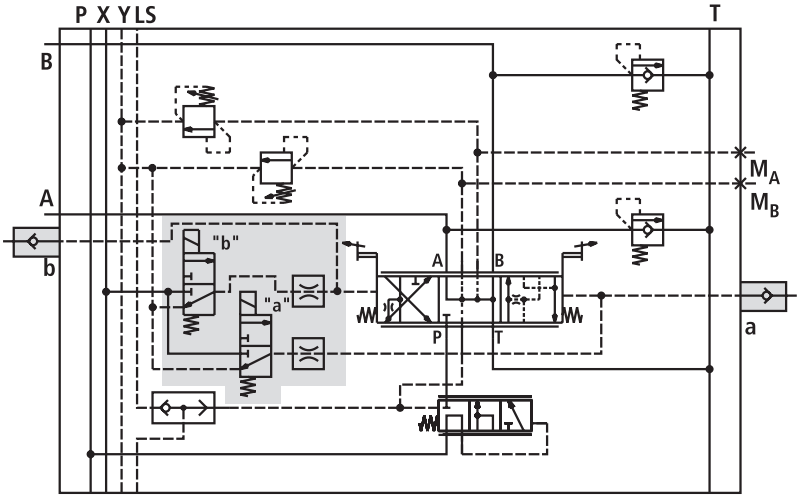

## Directional valve elements: Types of actuation – electro-hydraulic proportional

**Electro-hydraulic proportional with hand lever (encapsulated)**

**Ordering code:**

| | | | | | | | | |
|---|---|---|---|---|---|---|---|---|
| S | … M … | J | …–… | W2 | 1 | K | H… | H… |

Proportional pressure reducing valve
type FTDRE 2 K to RE 58032

☞ **Safety note!**

- Following hand lever [1]:
  The mechanical actuation can override the electro-hydraulic actuation. The hand lever is directly connected with the main spool and follows the spool movement in the case of electro-hydraulic control.
- Non-following hand lever [2]:
  The hand lever is connected with the main spool via a coupling. When the main spool is in the central position, the hand lever can be detented. With electro-hydraulic control, it will not follow the spool movement.

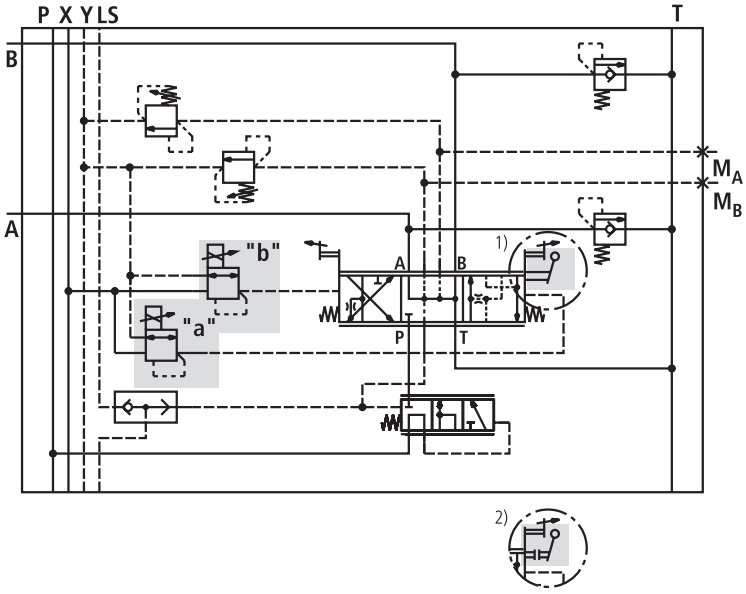


**Electro-hydraulic proportional with measuring ports at both sides**

**Ordering code:**

| | | | | | | | | |
|---|---|---|---|---|---|---|---|---|
| S | … M … | J | …–… | W6 | 9 | – | H… | H… |

Proportional pressure reducing valve
type FTDRE 2 K to RE 58032

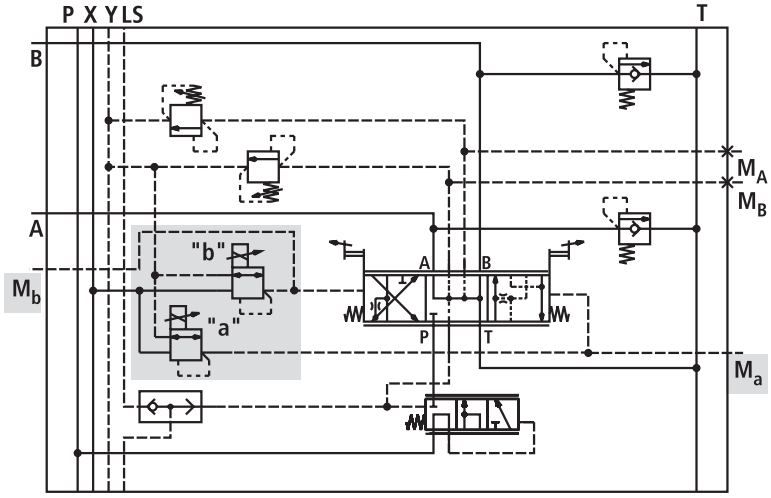


**Electro-hydraulic proportional with damping orifice and check valve**

**Ordering code:**

| | | | | | | | | |
|---|---|---|---|---|---|---|---|---|
| S | … M … | J | …–… | G2 | 1 | – | H… | H… |

Proportional pressure reducing valve
type FTDRE 2 K to RE 58032

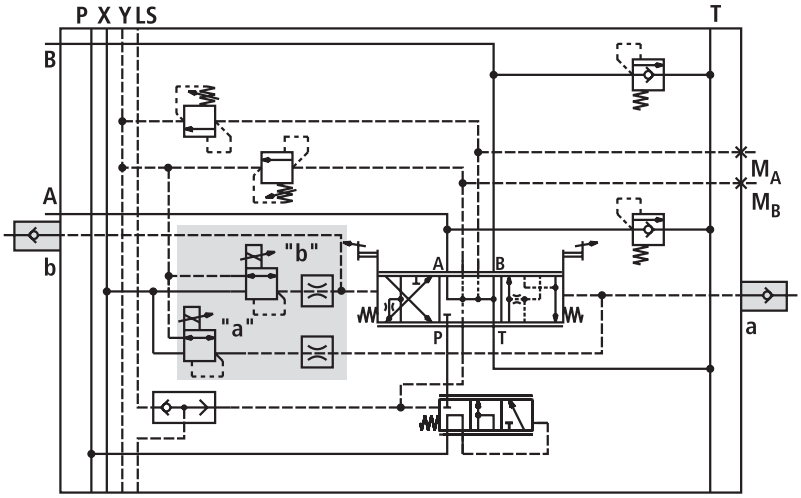

## Directional valve elements: Types of actuation – electro-hydraulic proportional

**Technical data FTDRE 2 K (see also RE 58032)**

| **Electrical** | | | | |
|---|---|---|---|---|
| Type of voltage | | | DC voltage | |
| Nominal voltage of amplifier | | V | 12 | 24 |
| Maximum control current | | A | 1.8 | 0.8 |
| Coil resistance (20°C) | | Ω | 2.4 | 12 |
| Duty cycle (with amplifier) | | % | 100 | |
| Electrical connection | | | See ordering code | |
| Type of protection to DIN 40050-9 | – Solenoid | | IP 69K | |
| | – Electrical connection | C4<br>K40 | IP 65K [1)]<br>IP 69K | |
| PWM frequency (recommended) [1)] | | Hz | 150 | |

[1)] The PWM frequency must be optimised to the individual application.
Here, the operating temperature must be taken into account.

**Technical data FTWE 2 K (see also RE 58007)**

| **Electrical** | | | | |
|---|---|---|---|---|
| Type of voltage | | | DC voltage | |
| Nominal voltage | | V | 12 | 24 |
| Power consumption at 20 °C | | W | 14.4 | 14.4 |
| Coil resistance $R_{20}$ | | Ω | 10 | 40 |
| Duty cycle | | % | 100 | |
| Switching time | $t_{ON}$ | ms | ≤ 20 | |
| | $t_{OFF}$ | ms | ≤ 30 | |
| Type of protection to DIN 40050-9 | – Solenoid | | IP 69K | |
| | – Electrical connection | C4<br>K40 | IP 65K [1)]<br>IP 69K | |
| Switching frequency | | Hz | 5 | |

[1)] For recommended plug-in connector, see page 36.

## Directional valve elements: Types of actuation – on-board electronics (OBE)

**Electronic pilot module**

**Ordering code:**

| S | … M … | J | …–… | CAQ | – | H… | H… |
|---|---|---|---|---|---|---|---|

| Ordering code | Short description |
|---|---|
| **AAQ** | Analogue interface |
| **CAQ** | Digital interface, BR protocol |
| **CBQ** | Digital interface, CANopen protocol |

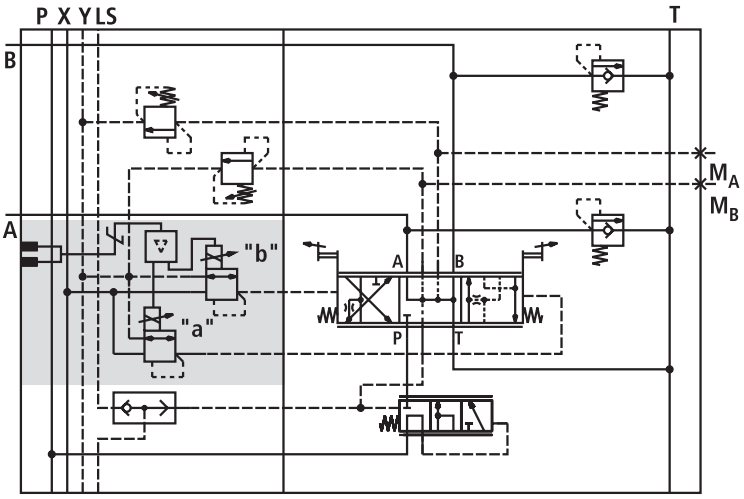


**Electronic pilot module with position sensor**

**Ordering code:**

| S | … M … | J | …–… | CAS | – | Q | Q |
|---|---|---|---|---|---|---|---|

| Ordering code | Short description |
|---|---|
| **CAS** | Digital interface, BR protocol with position sensor |
| **CBS** | Digital interface, CANopen protocol with position sensor |

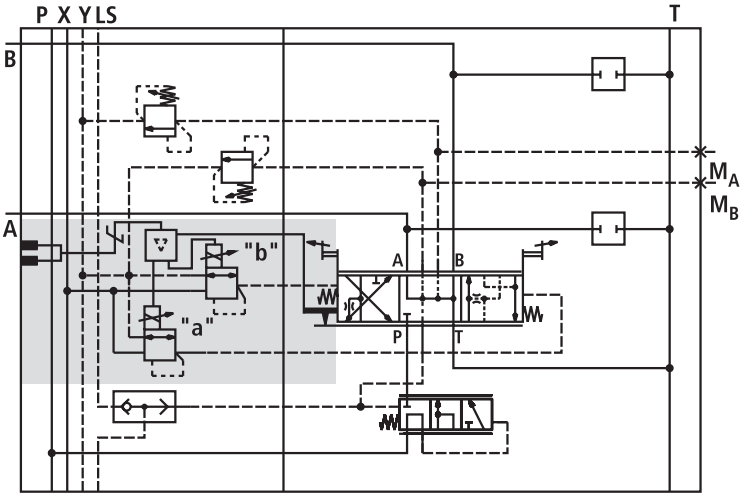


## Directional valve elements: Voltage supply and plug-in connector

| | Connector type | |
|---|---|---|
| **Supply voltage** | **Junior Timer 2-pin (AMP)** | **DT04-2P (Deutsch)** |
| 24 V | 1 | 8 |
| 12 V | 3 | 9 |

This indication is only required in the case of electro-hydraulic actuation and / or electro-proportional pressure relief function.

**Recommended female connector for connector Junior Timer 2-pin (AMP)**

Female connector for FTDRE… and FTWE… type of protection IP 69K

**Material number: R900313533**

for a litz wire cross-section of 0.5 to 1 $mm^2$ and for an insulation dameter of the individual seals of 1.2 to 2.1 mm

**Material number: R901022127**

for a litz wire cross-section of 0.5 to 1 $mm^2$ and for an insulation dameter of the individual seals of 2.2 to 3 mm

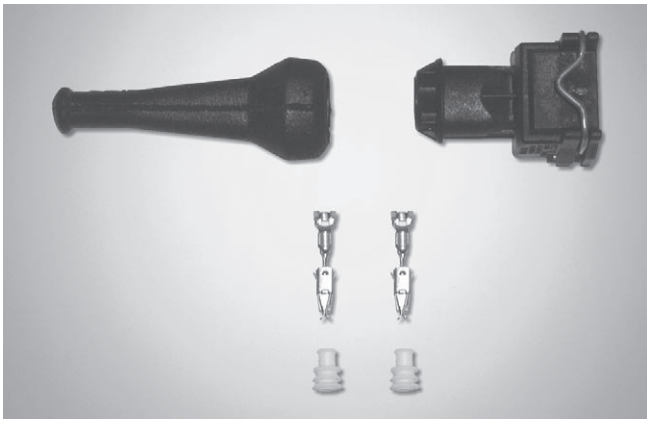

**Recommended mating connector for Junior Timer, 2-pin (AMP)**

☞ **Note!**

Plug-in connectors are not included in the scope of supply and must be ordered separately.

## End elements

**End element with LS unloading**

**Ordering code:**

| LA |
|---|

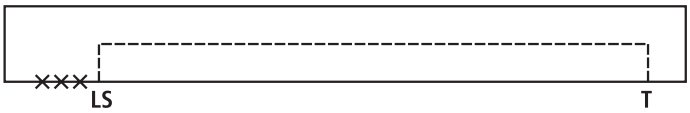


**End element with LS port**

**Ordering code:**

| LZ |
|---|

- LS unloading must be ensured externally

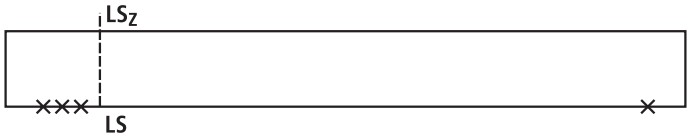


**End element LA with additional P- and T-port**

**Ordering code:**

| LAPT |
|---|

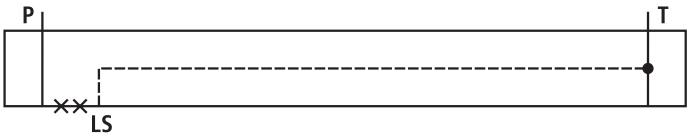


**End element LZ with additional P- and T-port**

**Ordering code:**

| LZPT |
|---|

- LS unloading must be ensured externally

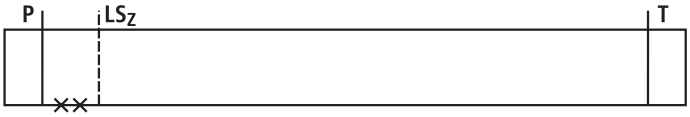


**End element LA with mounting cavity for FTDRE, FTWE**

**Ordering code:**

| LA | W4 | W2 |
|---|---|---|

**Short description**

- For 30 bar (pilot pressure)
- Consult the technical sales department!

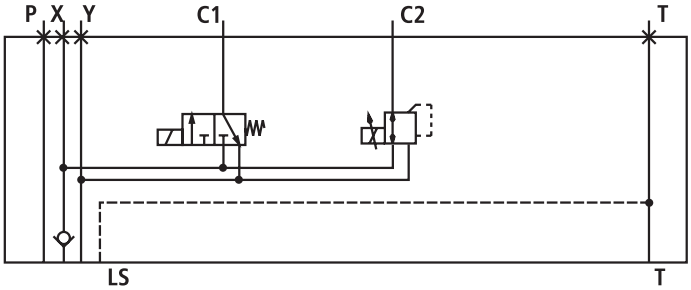


## End elements for combination with central inlet element

**End element for use with central inlet element**

**Ordering code:**

| M4 – 12 – 2X / LU |
|---|

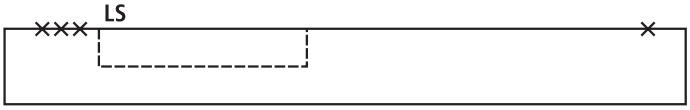


**End element LU with mounting cavities for FTDRE, FTWE**

**Ordering code:**

| M4 – 12 – 2X / LU | Q | W4 |
|---|---|---|

**Short description**

- For 30 bar (pilot pressure)
- Consult the technical sales department!

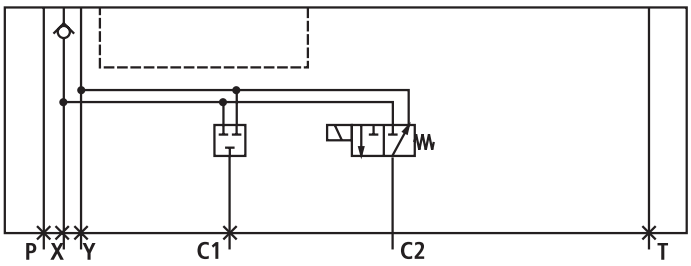

## Pipe connections

| | | | |
|---|---|---|---|
| **Inlet element, lateral** | Closed Center | **P** | G 3/4 |
| | | **T** | G 3/4 |
| | | **LS** | G 1/4 |
| | | **X, Y** | G 1/4 |
| | | **M** | G 1/4 |
| | Open Center | **P** | G 3/4 |
| | | **T** | G 1 |
| | | **LS** | G 1/4 |
| | | **X, Y** | G 1/4 |
| | | **M** | G 1/4 |
| **Inlet element, central** | Closed Center | **P** | G 1 |
| | | **T** | G 1 |
| | | **LS** | G 1/4 |
| | | **X, Y** | G 1/4 |
| | | **$M_P$** | G 1/4 |
| **Directional valve element** | With secondary valves | **A1 … A20, B1 … B20** | G 1/2 |
| | Without secondary valves | **A1 … A20, B1 … B20** | G 3/4 |
| | | **a1 … a20, b1 … b20** | G 1/4 |
| | | **$M_A$1 … $M_A$20, $M_B$1 … $M_B$20** | G 1/4 |
| | | **$M_a$1 … $M_a$20, $M_b$1 … $M_b$20** | G 1/8 |
| | Change-over axis | **C** | G 3/4 |
| **End element** | | **P** | G 1/2 |
| | | **T** | G 1/2 |
| | | **LS** | G 1/4 |
| | | **$LS_Z$** | G 1/4 |
| | | **X, Y** | G 1/4 |
| | | **C1, C2** | G 1/4 |
| | With LAPT, LZPT | **P, T** | G 3/4 |

**P** = Pump
**A, B** = Actuator
**a, b** = Pilot line
**T** = Tank
**X** = Pilot oil supply
**Y** = Pilot oil drain
**LS** = Load Sensing (LS)

**M, MP** = Pump measuring port
**$M_A$, $M_B$** = LS pressure measuring ports
**$M_a$, $M_b$** = Pilot pressure measuring ports
**C** = External actuator
**C1, C2** = Additional actuator

Connections according to ISO 1179-1

## Unit dimensions: Control block Closed Center with lateral inlet element

(According to order example on page 11, dimensions in mm)

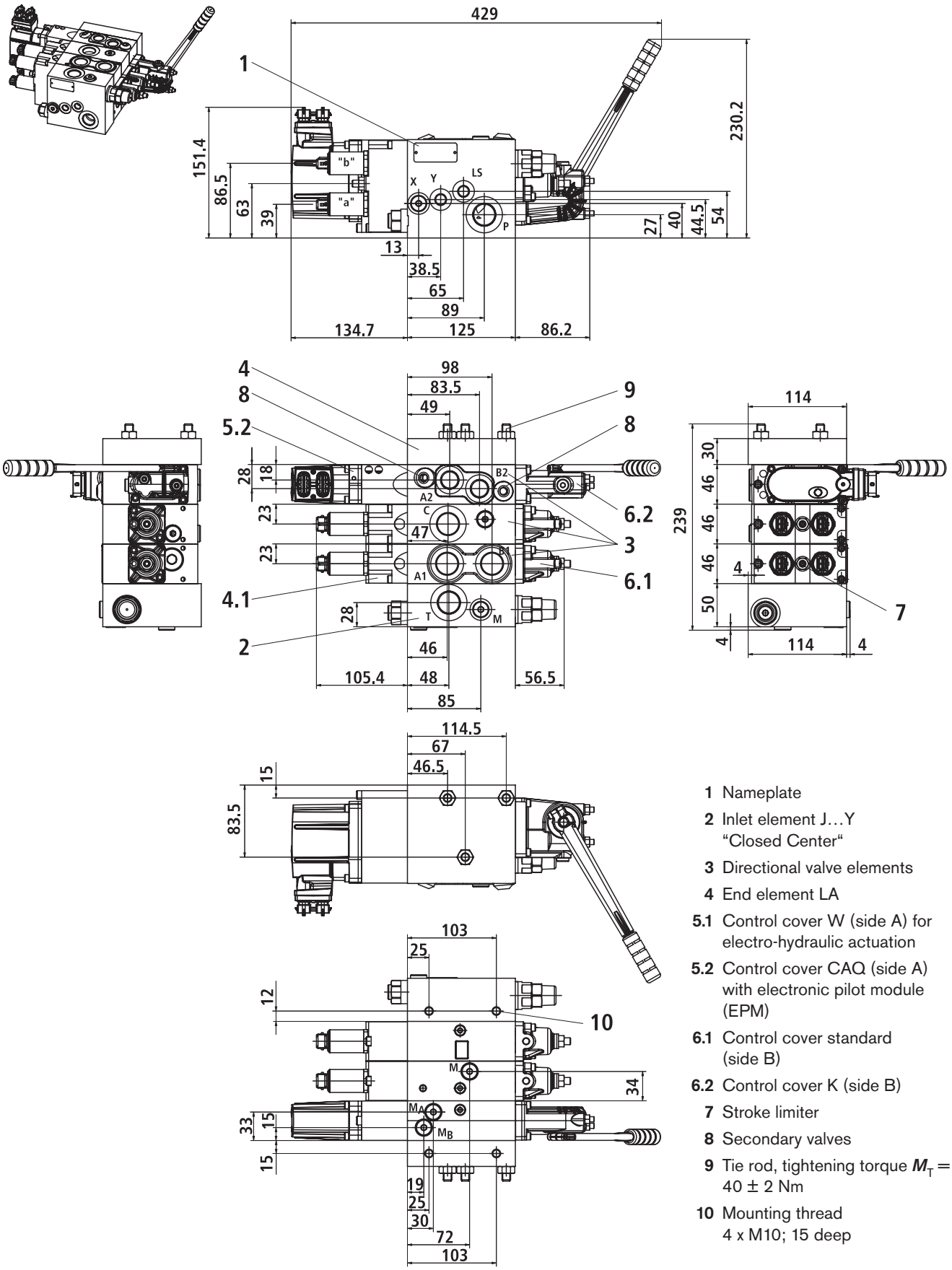


1 Nameplate
2 Inlet element J…Y "Closed Center"
3 Directional valve elements
4 End element LA
5.1 Control cover W (side A) for electro-hydraulic actuation
5.2 Control cover CAQ (side A) with electronic pilot module (EPM)
6.1 Control cover standard (side B)
6.2 Control cover K (side B)
7 Stroke limiter
8 Secondary valves
9 Tie rod, tightening torque $M_T$ = 40 ± 2 Nm
10 Mounting thread 4 x M10; 15 deep

## Unit dimensions: control block Open Center with lateral inlet element

(According to order example on page 12, dimensions in mm)

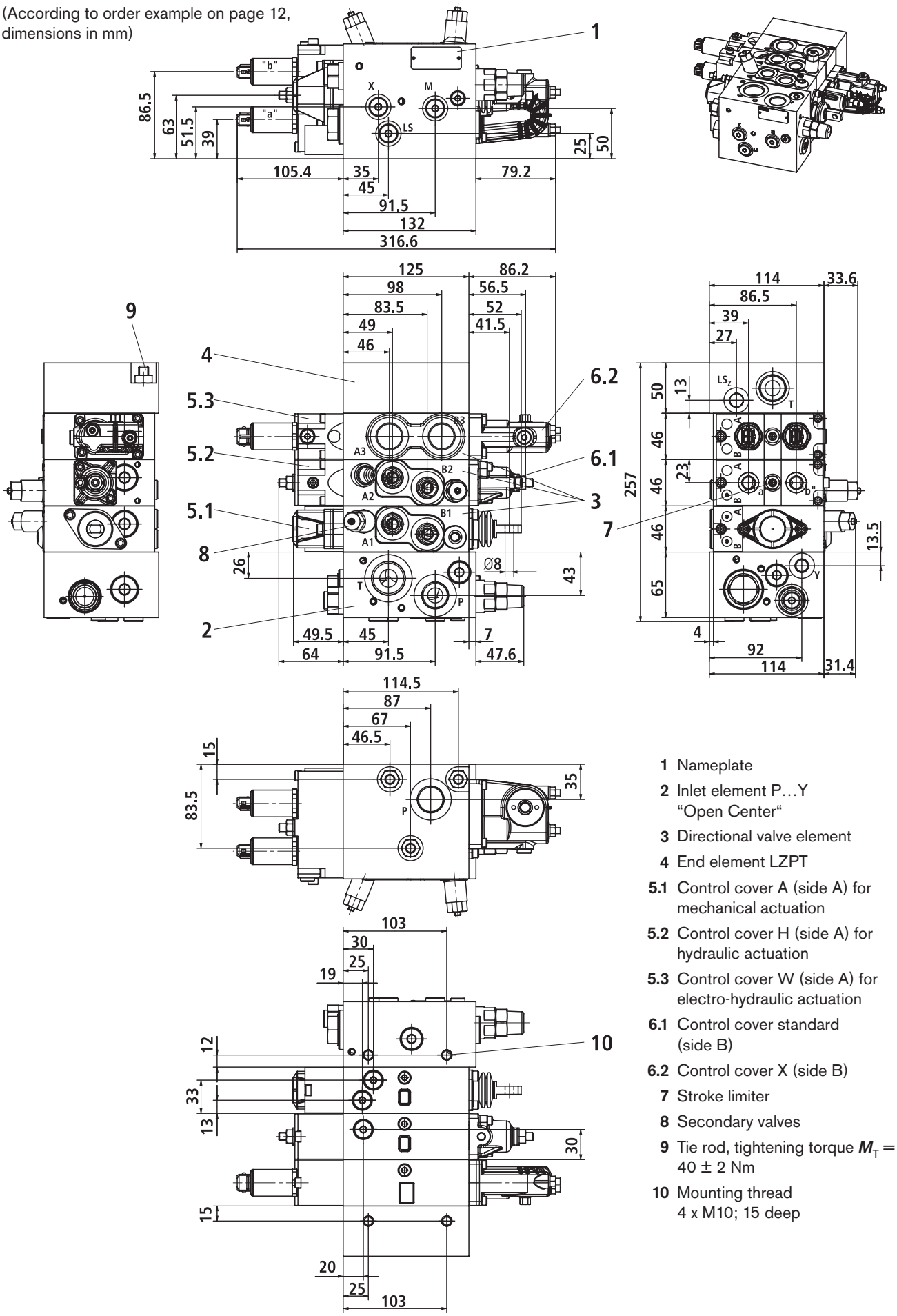


1 Nameplate
2 Inlet element P…Y "Open Center"
3 Directional valve element
4 End element LZPT
5.1 Control cover A (side A) for mechanical actuation
5.2 Control cover H (side A) for hydraulic actuation
5.3 Control cover W (side A) for electro-hydraulic actuation
6.1 Control cover standard (side B)
6.2 Control cover X (side B)
7 Stroke limiter
8 Secondary valves
9 Tie rod, tightening torque $M_T$ = 40 ± 2 Nm
10 Mounting thread 4 x M10; 15 deep

## Unit dimensions: Control block Closed Center with central inlet element

(According to order example on page 13, dimensions in mm)

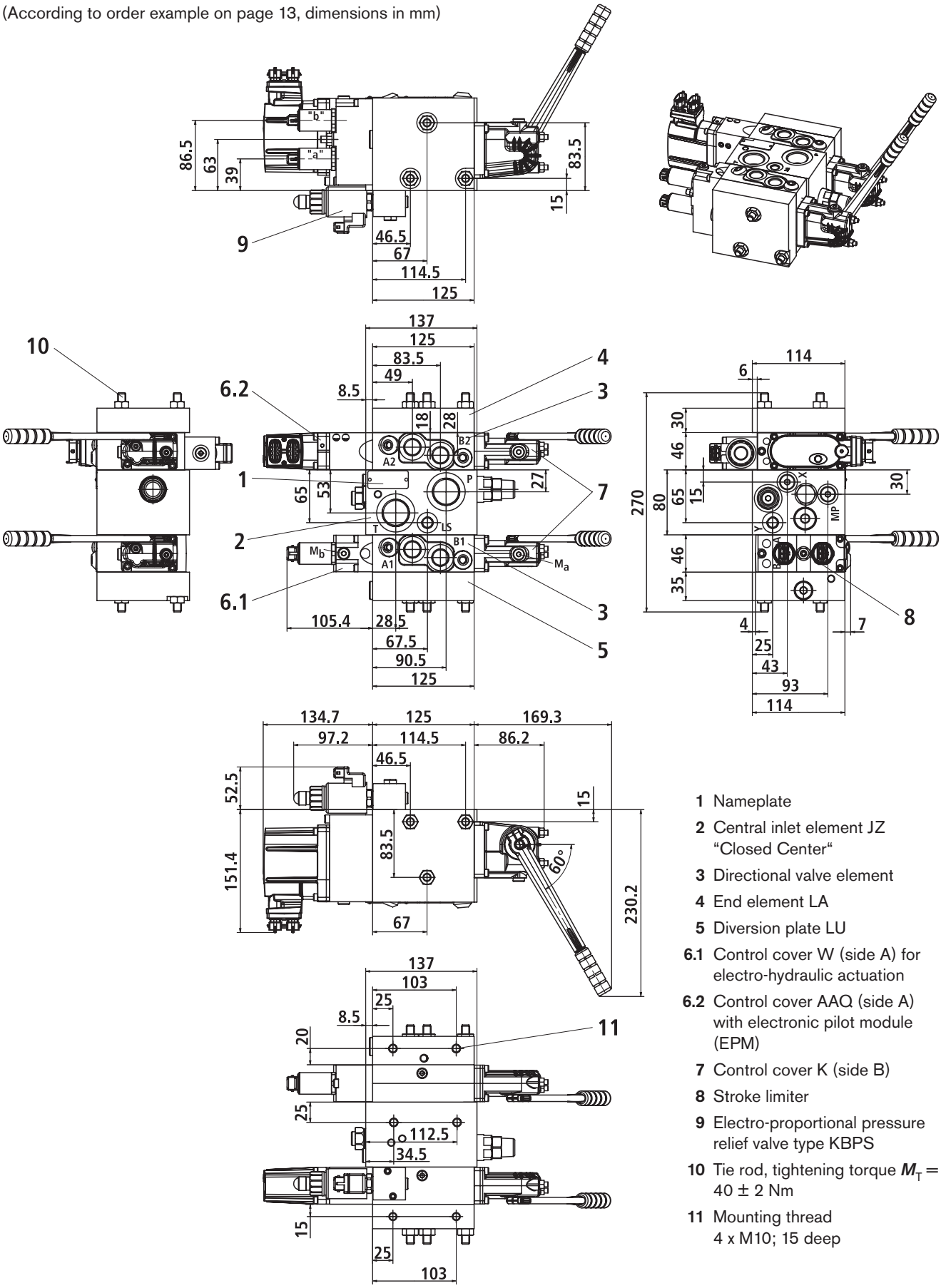


1 Nameplate
2 Central inlet element JZ "Closed Center"
3 Directional valve element
4 End element LA
5 Diversion plate LU
6.1 Control cover W (side A) for electro-hydraulic actuation
6.2 Control cover AAQ (side A) with electronic pilot module (EPM)
7 Control cover K (side B)
8 Stroke limiter
9 Electro-proportional pressure relief valve type KBPS
10 Tie rod, tightening torque $M_T$ = 40 ± 2 Nm
11 Mounting thread 4 x M10; 15 deep

## On-board electronics: Electronic pilot module (EPM)

### Function

The electronic pilot module controls the flow in control block M4-12 by means of an analogue or digital electrical signal.

The pilot module converts an analogue (voltage or PWM signal) or digital (CAN bus) input signal by means of two electro-hydraulic pressure reducing valves into a pilot pressure.

In the case of an analogue input signal, each pilot module must be connected separately to the control electronics of the machine.

In the case of a CAN bus control, the electrical connection can be looped through to the next pilot module via the second plug-in connection (daisy-chain cabling). Here, the entire valve block is connected to the control of the machine by means of the 4-pin plug of the first pilot module.

The electrical connection is made by means of a 4-pin plug of type Bosch Kompakt 1 .

Additional CAN bus stations can be connected to the output of the last pilot module (see also RE 64565).

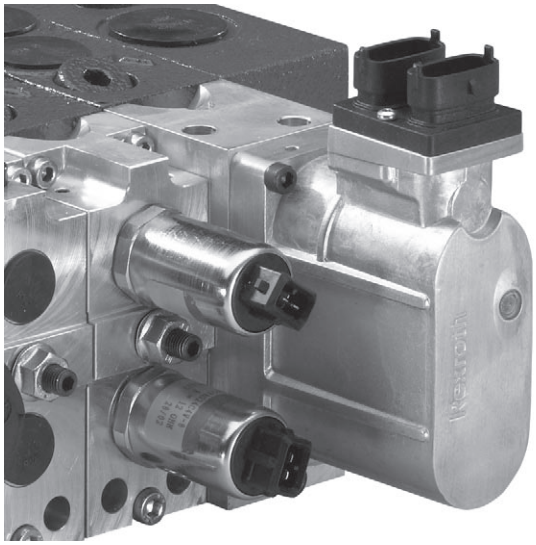

**M4-12 with on-board electronics and CAN control**

### Features

Time functions (ramp functions), characteristic curve shape and gradient can be parameterised or directly changed via the CAN bus during the operating cycle.

Various diagnosis functions monitor the pilot module for proper operation.

In the basic version, the following items are monitored:

- Correct receipt of a valid command value signal
- Uninterrupted connection with the command value encoder
- Compliance with the defined limits of the supply voltage
- Operation of pilot valves (short-circuit, cable break)

LEDs that are visible from outside signal any malfunction in the form of a fault code (flashing code).

On the analogue module, a relay output is available as fault indicator.

With the CAN bus variant, the fault code is transferred to the control in the state telegram of the pilot module and can be evaluated by the control.

- Reduced cabling effort with CAN wiring due to daisy chain
- Clocked output stages with superimposed dither
- Processor-independent watchdog
- Time ramps can be selected separately for the individual valve outputs A and B, open and close (CAN only; on analogue module firmly parameterised)
- Characteristic curves can be changed from linear to progressive shape separately for A and B, (CAN only; on analogue module firmly parameterised)
- Linear reduction of the characteristic curve and thus linear reduction in the total flow during operation (CAN only; on analogue module firmly parameterised)
- Selectable time ramp for shutdown in the event of a failure (only with analogue module)
- Selectable monitoring limits for the operating voltage
- Can be parameterised via CAN bus or RS232 interface (with interface box and software tool, see Accessories on page 46)
- Type of protection to EN 60529 IP 69K (only with plugged Bosch Kompakt plug-in connector)
- Type of protection to EN 60529 IP 67 (only with plugged Bosch Kompakt plug-in connector and M8 plug-in connector)
- Internal measurement of operating hours
- Internal saving of diagnosis data
- Comprehensive options for customised parameterisation by Bosch Rexroth in the factory

### Option

**Analogue interface in the CAN bus system**

Voltage supply 5 V and signal input 0…5 V for up to two analogue devices such as

- Sensors
- Switches
- Joysticks
- Potentiometers
- etc.

It hooks up analogue devices to the CAN bus system and therefore renders electronics superfluous that would otherwise be required in the component.

**Further options**

- SIL
- Position sensor
- Closed Loop Control

## Electronic pilot module

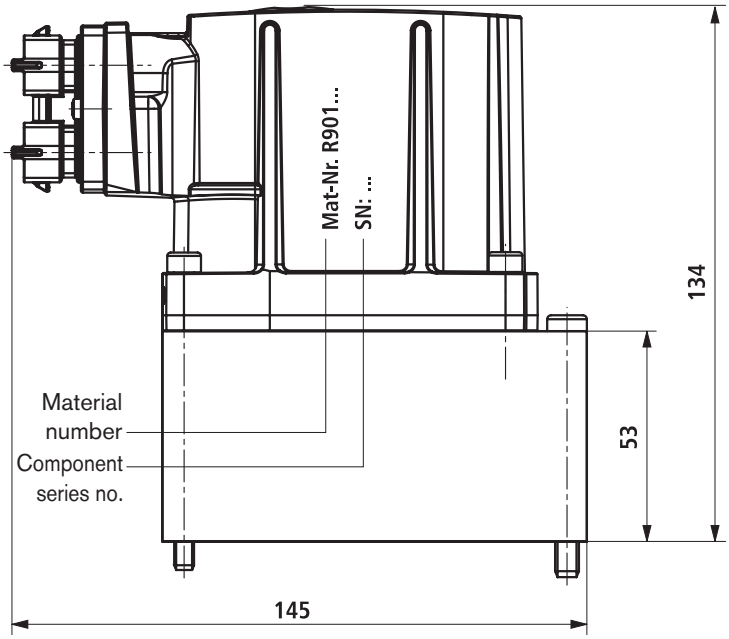


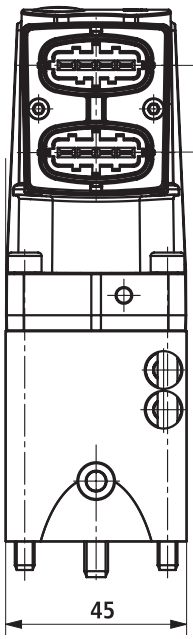


**Pin assignment of CAN plug-in connector**

Connection via Bosch Kompakt plug, coding 1 .

The second Bosch Kompakt plug, coding 2, can be used in conjunction with a CAN control to establish a connection to the next module or to another CAN station.

☞ **Note!**

Connecting cables or plugs are not included in the code of supply and must be ordered separately (see Accessories on page 46).

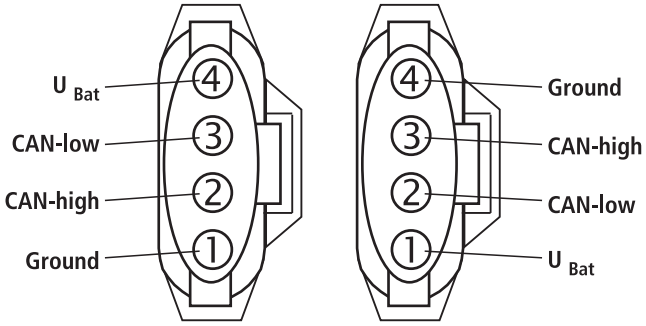


Black plug-in connector Grey plug-in connector

**Pin assignment of Bosch Kompakt plug-in connectors**

☞ **Safety notes!**

When interlinking modules or other CAN bus devices, observe the maximum current for the connecting cables, $I_{max}$ = 10A. The maximum number of modules with 12 V operating voltage is 8, with 24 V operating voltage, 12 modules, when these are 100% controlled at the same time.

Provide 10 Ampere for the fuse on the machine side.

The orientation of coding 1 and 2 plugs is rotated by 180°!

In conjunction with a CAN bus, the terminating resistor must be provided externally. A connecting cable with integrated terminating resistor is available as accessory item (see page 45). It can be used in the connection to the last pilot module of the valve block.

If a voltage signal is used, the potentiometer supply must be picked up directly from the valve. The greater the cable resistance between the supply pick-up and the valve plug, the more will the command value signal be falsified. This can lead to low-frequency vibrations of the valve.

The electronic pilot module must not be opened!

In the case of a defect we require the material and serial numbers for the technical identification.

☞ **Caution!**

Observe engineering and safety notes in the operating instructions RE 64565!

# Electronic pilot module – technical data

## General

| | | | | |
|---|---|---|---|---|
| Supply voltage | 12 V and/or 24 V on-board mains<br>Permissible voltage range 9 to 32 V | | | |
| El. power consumption | $U_{Bat}$ = 14 V | | $U_{Bat}$ = 28 V | |
| | typ. [W] | max. [W] | typ. [W] | max. [W] |
| in neutral position | 0.5 | 0.6 | 1.0 | 1.2 |
| at maximum output | 15 | 18.5 | 15 | 18.5 |
| Resolution | < 2% (deviations possible, depending on spool stroke and spool curve) | | | |

## Input signal

The following input signals are possible:

| | | |
|---|---|---|
| **Voltage** | | |
| Signal voltage | Absolute: 0.5 … 9.5 V, neutral = 5 V<br>0.25 … 4.75 V, neutral = 2.5 V<br>Relative to $U_{Bat}$ (0 V + 5 % … $U_{Bat}$ – 5 %) neutral = $U_{Bat}$ / 2 | |
| Signal voltage for sensor | $U_{Sensor\ 3,\ 4}$ = 0.5 … 4.5 V | |
| Pin assignment according to lettering on plug-in connectors | **Coding 1 (black)**<br>Pin 1 = Ground<br>Pin 2 = Signal<br>Pin 3 = Relay output<br>Pin 4 = $U_{Bat}$ | **Coding 2 (grey)**<br>Impossible |
| Input resistance | > 100 kΩ | |
| Command value potentiometer | Recommended: ≤ 5 kΩ | |
| Driver for safety relay | 100 mA | |
| **PWM** (pulse-width-modulated) | | |
| Signal voltage | Absolute 5 V / 10 V<br>Battery voltage (standard) | |
| Pin assignment according to lettering on plug-in connectors | **Coding 1 (black)**<br>Pin 1 = Ground<br>Pin 2 = Signal<br>Pin 3 = Relay output<br>Pin 4 = $U_{Bat}$ | **Coding 2 (grey)**<br>Impossible |
| Input resistance | > 100 kΩ | |
| Signal types | Normal / inverted | |
| Driver for safety relay | 100 mA | |

## Electronic pilot module – technical data

| CAN bus | | |
|---|---|---|
| Pin assignment according to lettering on Bosch Kompakt plug-in connectors | **Coding 1 (black)**<br>Pin 1 = Ground<br>Pin 2 = CAN-high<br>Pin 3 = CAN-low<br>Pin 4 = $U_{Bat}$ | **Coding 2 (grey)**<br>Pin 1 = $U_{Bat}$<br>Pin 2 = CAN-low<br>Pin 3 = CAN-high<br>Pin 4 = Ground |
| Pin assignment according to lettering on plug-in connectors for sensors (M8 plug-in connectors) | Pin 1 = 5 V<br>Pin 2 = Signal 2<br>Pin 3 = Ground<br>Pin 4 = Signal 1 | |
| Input signal | Physical Layer to ISO 11898 'High Speed' | |
| Physical Layer | According to ISO 11898 CAN 2.0A and 2.0B | |
| CAN baud rate: | 125 to 1 M Baud | |
| Scanning | Single scan | |
| Bus termination (120 Ω resistance): | By the customer through external wiring or termination plug with integrated resistor | |
| Protocols | CANopen to DSP 408, DSP 401, J 1939, Rexroth protocol, custom on enquiry | |

☞ **Note**!

Further information about the proper handling of hydraulic products of Bosch Rexroth can be found in our brochure "Hydraulic valves for mobile applications – general information", RE 64020-B1

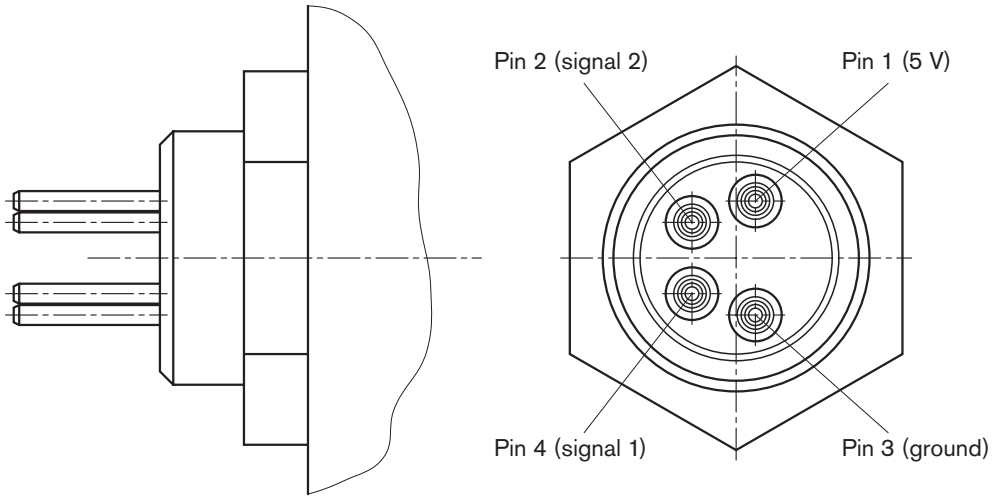


**Pin assignment of M8 plug, IP 67**

## Electronic pilot module – specified parameters

The form for specifying parameters can be found in data sheet RE 64565-07B.
It is used to parameterise the electronic pilot module according to the customer's requirements before it leaves the factory.

## Electronic pilot module – accessories

**Plug-in connector kit Bosch Kompakt coding 1 (item 1)**
**Material number: R900785606**

- Plug-in connector Bosch Kompakt coding 1
- 4 contacts AMP JPT 1.5mm$^2$ to 2.5mm$^2$
- 4 contacts AMP JPT 0.5mm$^2$ to 1.0mm$^2$
- 4 single-wire seals 1.5mm$^2$ to 2.5mm$^2$
- 4 single-wire seals 0.35mm$^2$ to 1.0mm$^2$
- 4 blind plugs
- 1 sleeve

**Plug-in connector kit Bosch Kompakt coding 2 (item 2)**
**Material number: R900785607**

- Plug-in connector Bosch Kompakt coding 2
- 4 contacts AMP JPT 1.5mm$^2$ to 2.5mm$^2$
- 4 contacts AMP JPT 0.5mm$^2$ to 1.0mm$^2$
- 4 single-wire seals 1.5mm$^2$ to 2.5mm$^2$
- 4 single-wire seals 0.35mm$^2$ to 1.0mm$^2$
- 4 blind plugs
- 1 sleeve

**Plug-in connector Bosch Kompakt coding 2 (item 3)**
**with integrated terminating resistor**

**Ordered on enquiry!**

**Plug-in connector Bosch Kompakt coding 2**
**Blind plug**
**Ordered on enquiry!**

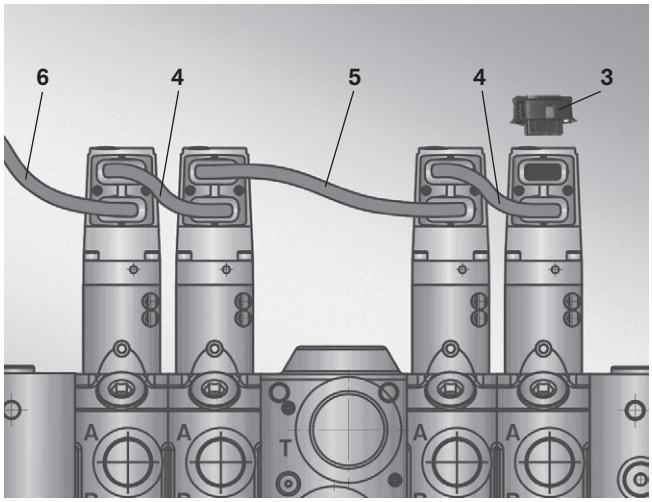


**Connecting cable, 4-pin, length approx. 90 mm (item 4)**
**Material number: R900785196**

For connecting 2 pilot modules

**Connecting cable, 4-pin, length approx. 250 mm (item 5)**
**Material number: R917002224**

For connecting 2 pilot modules

**Connecting cable, 4-pin, length approx. 4000 mm (item 6)**
**Ordered on enquiry!**

For connecting the machine electronics to the OBE with a plug-in connector Bosch Kompakt coding 1

☞ **Caution!**

Protection class is not defined, since plug-in connector is fitted only on one end.

**EHS Tool**

**Tool for customer parameterisation (EHS Tool)**
**Material number: R902091023**

Allows customers to edit custom parameters.

Connection to the valve via the serial interface of a commercial PC in conjunction with the configurator box that is available as optional accessory item.

## Notes

Bosch Rexroth AG
Hydraulics
Zum Eisengießer 1
97816 Lohr am Main, Germany
Phone +49 (0) 93 52 / 18-0
Fax +49 (0) 93 52 / 18-23 58
info.brm-mc@boschrexroth.de
www.boschrexroth.de

© This document, as well as the data, specifications and other information set forth in it, are the exclusive property of Bosch Rexroth AG. Without their consent it may not be reproduced or given to third parties.
The data specified above only serve to describe the product. No statements concerning a certain condition or suitability for a certain application can be derived from our information. The information given does not release the user from the obligation of own judgment and verification. It must be remembered that our products are subject to a natural process of wear and aging.

## Notes

Bosch Rexroth AG
Hydraulics
Zum Eisengießer 1
97816 Lohr am Main, Germany
Phone +49 (0) 93 52 / 18-0
Fax +49 (0) 93 52 / 18-23 58
info.brm-mc@boschrexroth.de
www.boschrexroth.de

© This document, as well as the data, specifications and other information set forth in it, are the exclusive property of Bosch Rexroth AG. Without their consent it may not be reproduced or given to third parties.
The data specified above only serve to describe the product. No statements concerning a certain condition or suitability for a certain application can be derived from our information. The information given does not release the user from the obligation of own judgment and verification. It must be remembered that our products are subject to a natural process of wear and aging.

# Manuale di installazione e manutenzione

# *Installation and maintenance manual*

## Riduttori
## *Gear boxes*

# RE-MD-MR-GB

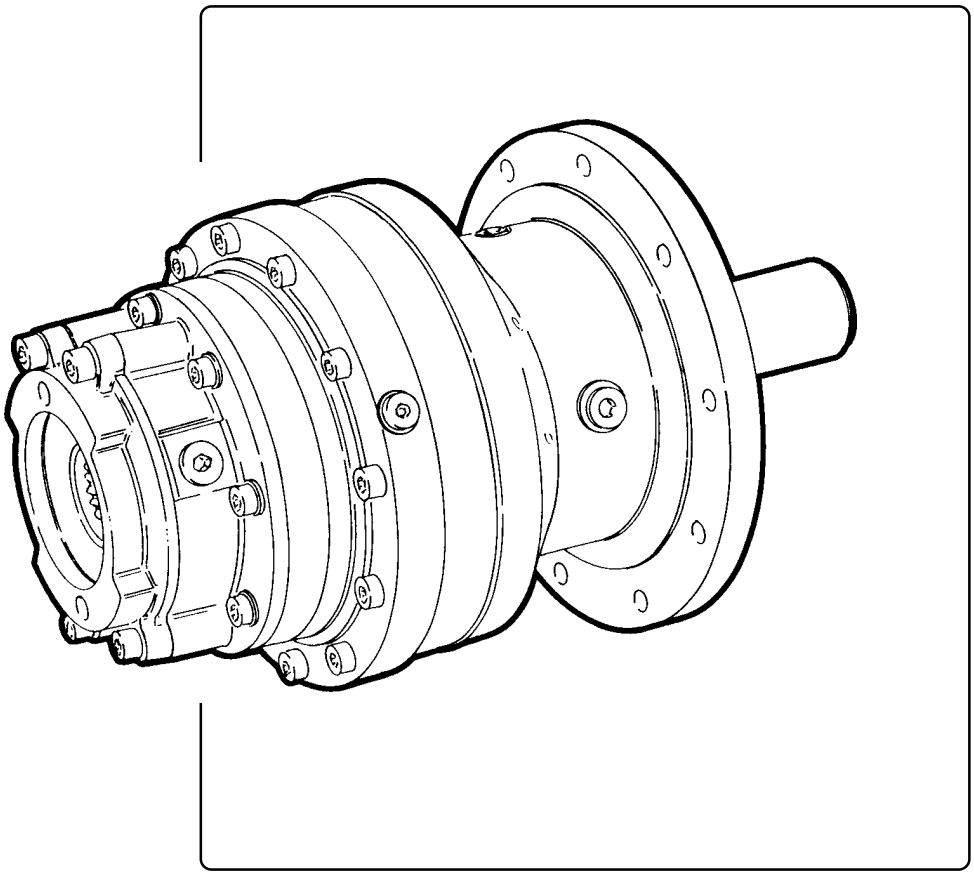

Codice / *Code* : **DO 991122** Edizione / *Edition* : **11/99**

**INDICE** ..... **Pagina**

**1- Introduzione** ..... 3
1.1 - Consultazione del manuale ..... 3
1.2 - Scopo del manuale ..... 3
1.3 - Garanzia ..... 4
1.4 - Avvertenze di carattere generale ..... 5
1.5 - Riservatezza ..... 6
1.6 - Revisione del manuale ..... 6

**2- Informazioni e dati tecnici** ..... **7**
2.1 - Targa di identificazione ..... 7
2.2 - Posizioni di montaggio ..... 8

**3 - Funzionamento** ..... **9**
3.1 - Stato di fornitura ..... 9

**4 - Imballo, movimentazione, ricevimento, ricovero** ..... **11**
4.1 - Imballo ..... 11
4.2 - Movimentazione ..... 12
4.3 - Ricevimento ..... 13
4.4 - Movimentazione della macchina senza imballo ..... 14
4.5 - Rimessaggio ..... 14

**5 - Installazione** ..... **17**
5.1 - Prescrizioni generali ..... 17
5.2 - Installazione riduttori con fissaggio a flangia ..... 17
5.3 - Installazione riduttori con fissaggio a piede ..... 18
5.4 - Riduttori con montaggio pendolare ..... 19
5.5 - Montaggio motore e accessori ..... 20

**6 - Funzionamento freni** ..... **21**
6.1 - Freno lamellare negativo ..... 21

**7 - Lubrificazione** ..... **23**
7.1 - Lubrificazione riduttore ..... 23
7.2 - Lubrificazione freni lamellari ..... 23
7.3 - Tabella dei lubrificanti consigliati ..... 24
7.4 - Vaso di espansione ..... 25

**8 - Verifiche** ..... **27**
8.1 - Controlli prima dell'avviamento ..... 27
8.2 - Controlli dopo il primo avviamento ..... 32

**9 - Manutenzione** ..... **33**
9.1 - Manutenzione ordinaria ..... 33
9.2 - Sostituzione olio ..... 34
9.3 - Manutenzione straordinaria ..... 35
9.4 - Manutenzione freni ..... 35
9.5 - Demolizione e smaltimento ..... 35

**10 - Inconvenienti e rimedi** ..... **37**
10.1 - Inconvenienti, cause, rimedi ..... 37

***INDEX*** ..... ***Page***

***1- Introduction*** ..... ***3***
*1.1 - How to consult the Manual* ..... *3*
*1.2 - Scope of the Manual* ..... *3*
*1.3 - Warranty* ..... *4*
*1.4 - General warnings* ..... *5*
*1.5 - Reproduction and copyright restrictions* ..... *6*
*1.6 - Revision of the manual* ..... *6*
***2- Informations and technical data*** ..... ***7***
*2.1 - Identification namplate* ..... *7*
*2.2 - Installation positions* ..... *8*
***3 - Working*** ..... ***9***
*3.1 - Supply condition* ..... *9*
***4 - Packing, handling, receiving, storage*** ..... ***11***
*4.1 - Packing* ..... *11*
*4.2 - Handling* ..... *12*
*4.3 - Receiving* ..... *13*
*4.4 - Handling the machine withouth packing* ..... *14*
*4.5 - Storage* ..... *14*
***5 - Installation*** ..... ***17***
*5.1 - General instructions* ..... *17*
*5.2 - Installing flange fastening gear units* ..... *17*
*5.3 - Installing leg fastening gear units* ..... *18*
*5.4 - Shaft mounted gearboxes* ..... *19*
*5.5 - Motor and accessory assembly* ..... *20*
***6 - Brake start-up*** ..... ***21***
*6.1 - Negative multi-disk brake* ..... *21*
***7 - Lubrication*** ..... ***23***
*7.1 - Gear unit lubrication* ..... *23*
*7.2 - Multi-disk brake lubrication* ..... *23*
*7.3 - Recommended lubricant table* ..... *24*
*7.4 - Expansion tank* ..... *25*
***8 - Checks*** ..... ***27***
*8.1 - Pre-start-up checks* ..... *27*
*8.2 - First start-up checks* ..... *32*
***9 - Maintenance*** ..... ***33***
*9.1 - Routine maintenance* ..... *33*
*9.2 - Oil change* ..... *34*
*9.3 - Unscheduled maintenance* ..... *35*
*9.4 - Brake maintenance* ..... *35*
*9.5 - Scrapping and disposal* ..... *35*
***10 - Problems and solutions*** ..... ***37***
*10.1 - Troubleshooting* ..... *37*

# 1 Introduzione
# *Introduction*

Gentile Cliente,
la **Dinamic Oil S.p.A.** La ringrazia per la preferenza accordataci nell'avere scelto un proprio prodotto ed è lieta di annoverarla tra i propri Clienti confidando che lo stesso risponda alle Sue aspettative.

## 1.1 - Consultazione del manuale

Per localizzare immediatamente l'argomento che più interessa, all'inizio di questo manuale è inserito un Indice Generale di facile consultazione.

## 1.2 - Scopo del manuale

Il presente manuale fornisce le informazioni per la corretta installazione, l'uso e la manutenzione del riduttore da Voi acquistato nonché le prescrizioni ed i criteri fondamentali per operare in sicurezza.
Al fine di rendere più chiara la comprensione di questo manuale di seguito riportiamo le spiegazioni dei termini in esso più utilizzati e le simbologie usate:

- **Zona pericolosa:**
  come "zona pericolosa" si intende la zona, all'interno od in prossimità della macchina, in cui non è permesso a nessuna persona di sostare per non mettere a rischio la propria incolumità.

- **Persona esposta:**
  qualsiasi persona che si trovi o interamente o parzialmente in una zona definita pericolosa.

- **Operatore:**
  è la persona più appropriata ad eseguire operazioni di installazione, manutenzione ordinaria e interventi di pulizia sulla macchina. E' in grado di svolgere mansione atte al funzionamento della macchina e di compiere le necessarie regolazioni.

*Dear customer,*
***Dinamic Oil S.p.A.*** *would like thank you for choosing one of its products and is pleased to include you among its Customers. We are sure that our product will live up to Your expectations.*

## *1.1 - How to consult the Manual*

*It easy to consult this manual by referring to the table of contents which can be used to find the subject of interest very quickly.*

## *1.2 - Scope of the Manual*

*His manual provides the Gear unit user with all the information necessary to ensure correct installation, use and maintenance in compliance with the safety restrictions set forth by current standards.*
*To undestand this manual even better, we would like to describe the following terms used in the document:*

- ***Hazardus area:***
  *area within or in the proximity of the machine which, for their own safety no-one is permitted to enter.*

- ***Exposed person:***
  *any person who is inside all or part of a hazardous area.*

- ***Operatoror:***
  *person assigned to install, operate, adjust, perform routine maintenance and clean the machine. This person is capable of all tasks relative to the machine's operation and or ensuring the necessary adjustment are carried out.*

- **Tecnico qualificato:**
  è una persona specializzata in grado di compiere interventi di riparazione e manutenzione straordinaria che richiedono una particolare conoscenza della macchina e tutte quelle prescrizioni per operare in condizioni di sicurezza durante gli interventi.

**1.2.1 Simbologia utilizzata nel presente manuale:**

**ATTENZIONE!!**

Indica una prescrizione antinfortunistica rivolta all'operatore.

**AVVERTENZA!!**

Indica la possibilità che si possano arrecare danni alla macchina e/o ai suoi componenti.

**PRUDENZA!!**

Indica informazioni e procedure inerenti l'operazione che si sta eseguendo.

Nota

Indica informazioni e procedure utili ed importanti.

Nota

In caso di dubbi, guasti, anomalie, smarrimento del manuale Vi pregiamo contattare **l'Ufficio Tecnico Commerciale della Dinamic Oil S.p.A.**

## 1.3 - Garanzia

- **Dinamic Oil S.p.A.** garantisce che i suoi prodotti sono esenti da difetti di materiali o di costruzione per il periodo indicato sulle Conferme d'ordine Dinamic Oil al momento dell'acquisto della merce.
- La garanzia consiste nella riparazione o sostituzione presso la **Dinamic Oil S.p.A.** di parti o componenti resi inservibili per accertato difetto del materiale o di costruzione.

- ***Schilled technician:***
  *a specialised person who performs unscheduled maintenance and repairs requiring special knowledge of the machine and who knows all the regulations regarding safety when carrying out the said work.*

***1.2.1 Safety symbols used in this manual:***

***ATTENTION!!***

*Operator accident-prevention standards.*

***WARNING!!***

*The machine and/ or its parts may be damaged.*

***PRECAUTION!!***

*Additional information regarding the operation being carried outo.*

*Note*

*Provides useful information.*

*Note*

*For any doubts or if the manual has been damaged or lost, please do not hesitate to contact the **Dinamic Oil S.p.A.Technical Commercial Department.***

## *1.3 - Warranty*

- ***Dinamic Oil S.p.A.*** *warrants that its products are free from all defects in materials or workmanship during the warranty period indicated on the order confirmation Dinamic Oil at the moment of purchase.*
- ***Dinamic Oil S.p.A.*** *warrants that its products are free from all defects in materials or workmanship during the warranty period of twelve months, which commences on the date the products leave the warehouse.*

Essa si attua previo esame dei pezzi difettosi resi franco destino e delle loro cause esclusivamente a cura della **Dinamic Oil S.p.A.**
La garanzia è tassativamente limitata alla riparazione o alla sostituzione dei prodotti.
E' quindi esclusa ogni pretesa al rimborso dei danni diretti o indiretti di qualunque natura in qualsivoglia caso.

Le merci possono essere rese solo dopo autorizzazione della **Dinamic Oil S.p.A.**

- Sono esclusi dalla garanzia "O" rings e guarnizioni in genere.
- Sono esclusi dalla garanzia costi connessi allo smontaggio e montaggio dei prodotti difettosi dalle apparecchiature utilizzatrici.
- La garanzia è nulla per i prodotti riparati, modificati o semplicemente smontati anche parzialmente.
- La garanzia è nulla per i prodotti di cui si fa cattivo uso, montaggio improprio o negligente, manomissione.
- Questa garanzia, riconosciuta da **Dinamic Oil S.p.A.** attraverso la propria organizzazione commerciale, esclude e sostituisce ogni altra garanzia di qualunque natura.

## 1.4 - Avvertenze di carattere generale

All'atto della consegna verificare che il riduttore non abbia subito danni durante il trasporto che eventuali accessori siano integri e completi.

Il riduttore deve essere utilizzato in ambienti e per usi coerenti a quelli per il quale è stato progettato.

Ogni uso improprio dello stesso è da ritenersi vietato.

L'eventuale modifica o sostituzione di parti di esso non espressamente autorizzate dalla **Dinamic Oil S.p.A.** solleverà la ditta costruttrice da eventuali responsabilità civili e penali dovute a infortunio verificatosi e ne invaliderà oltremodo la garanzia.

Prima dell'utilizzo del riduttore, per operare in sicurezza, è importante che l'operatore addetto abbia letto e compreso il presente manuale e sia stato opportunamente informato sui seguenti argomenti:

- rischi di infortunio;
- dispositivi predisposti per la sicurezza;
- DPI (dispositivi protettivi individuali come: occhiali, guanti, caschi antinfortunistici ecc.).
- Regole antinfortunistiche generali o previste dalle direttive internazionali che regolano la legislazione del paese di destinazione della macchina.

*Under this warranty, any defective pieces must be sent to **Dinamic Oil S.p.A.** which will examine them so as to determine their cause. All trasportation fees and other charges must be paid by the purchaser. This warranty is strictly limited to the repair or replacement of products. Under no circumstances will the manufacturer accept claims from customer demanding reimbursement for direct or indirect damages of any nature.*

*The merchandise may be returned only when previously authorized by **Dinamic Oil S.p.A.***

- *This warranty does not extend to "0" rings or gaskets in general.*
- *This warranty does not cover any costs associated with the installation or removal of defective parts from the purchaser' s equipment.*
- *This warranty does not extend to any products that have been repaired, modified or simply disassembled, even partially.*
- *This warranty does not extend to any products that have been subject to misuse or abuse, incorrect or careless assembly and tampering.*
- *This warranty is recognized by **Dinamic Oil S.p.A.** through its authorized sellers.*
  *Dinamic Oil disclaims all other warranties of any nature whatsoever.*

## *1.4 - General warnings*

*When delivered, check that gear unit has not been damaged during transport and that any accessories are integral and complete.*

*The gear unit must be used in environments and for application that comply with what is indicated in the designed phase.*

*Any improper use of the gear unit is prohibited.*

*Any change or replacement of machine parts, which has not been authorized by **Dinamic Oil S.p.A.** may represent an accident risk and releases the manufacturer from any civil or penal liabilities, and will always invalidate the warranty.*

*Before using the gear unit, to operate in safety conditions, is important that the operator must have read and understood this manual and must be informed about the following subjects:*

- *accident risks;*
- *devices designed to ensure operator safety;*
- *D.P.I (individual protection devices: goggles, gloves, hard-hat etc.).*
- *General accident- prevention rules or those set forth by international directives who control the law of the Country where the machine will be used.*

## 1.5 - Riservatezza

Tutti i diritti riservati alla **Dinamic Oil S.p.A.**
Le informazioni tecniche contenute in questo manuale sono di esclusiva proprietà della **Dinamic Oil S.p.A.** e devono essere considerate di natura riservata; pertanto ne è vietata la riproduzione o la divulgazione, seppure parziale, senza l'espressa autorizzazione della **Dinamic Oil S.p.A**. stessa.

## 1.6 - Revisione del manuale

Il costruttore si riserva di aggiornare il manuale a seguito di modifiche o sostituzioni funzionali alla macchina.

## *1.5 - Reproduction and copyright restrictions*

***Dinamic Oil S.p.A.*** *reserves all rights.*
*The technical information contained in this manual is the exclusive property of* ***Dinamic Oil S.p.A.*** *and must be considered reserved. Therefore the reproduction or publication of the said manual, even in part, is strictly forbidden without the express authorisation of* ***Dinamic Oil S.p.A.*** *itself.*

## *1.6 - Revision of the manual*

*The manufacturer reserves the right to update the manual further to any machine functional changes or replacements.*

# 2 Informazioni e dati tecnici
# *Informations and technical data*

## 2.1 - Targa di identificazione

Su ogni riduttore è collocata una targhetta di identificazione contenente il numero di serie ed il codice dello stesso.

Nota

Per nessun motivo i dati riportati sulla targhetta possono essere alterati.

## *2.1 - Identification namplate*

*On each gear unit is placed an identification namplate conteining the serial number and the code.*

*Note*

*Under no circumstances must the data shown on the specification plate be altered.*

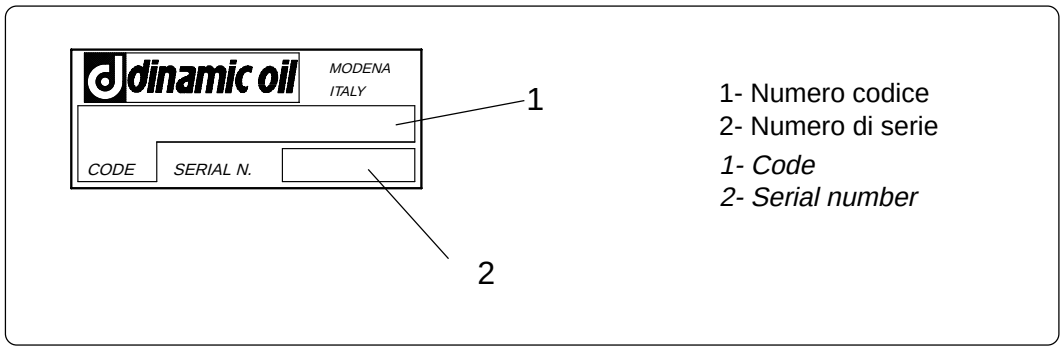


Fig. 2.1.1

### 2.1.1- Descrizione del codice

### *2.1.1- Code description*

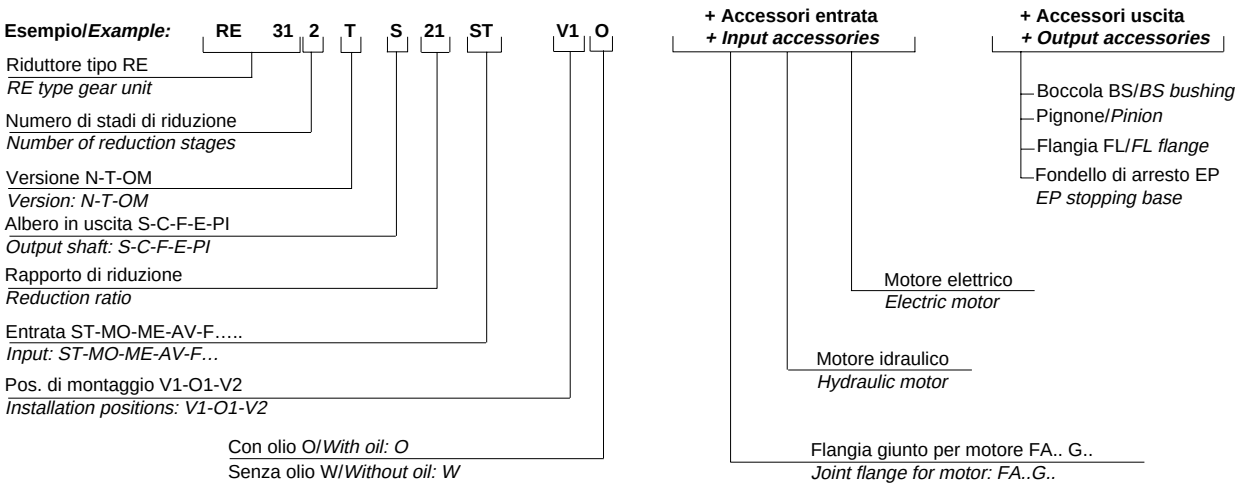

## 2.2 - Posizioni di montaggio

## *2.2 - Installation positions*

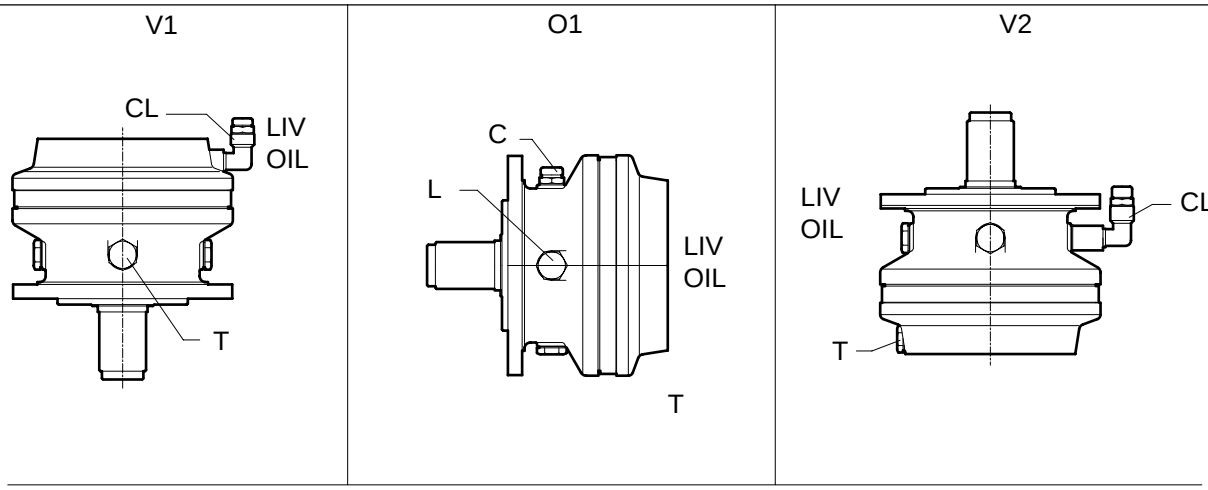


C = Tappo di scarico e sfiato
L = Tappo di livello
T = Tappo di scarico

*C = Discharge cap and breather pipe*
*L = Level cap*
*T = Discharge cap*

Fig. 2.2.1

# 3 Funzionamento
# *Working*

## 3.1 - Stato di fornitura

I riduttori sono consegnati protetti da idonea vernice adatta a resistere in condizioni ambientali normali, sia all'esterno sia all'interno e possono prevedere finiture con vernici di tipo sintetico.

Nel caso i riduttori debbano essere utilizzati con particolari condizioni ambientali dovranno essere trattati con vernici speciali.

Tutte le parti esterne del riduttore (estremità alberi cavi e non cavi, centraggi, piani di appoggio ecc…) sono protetti con olio antiossidante (Sealtek), solo quando il trasporto è via mare. Anche le parti interne della carcassa del riduttore, nonché i cinematismi, sono protette con olio antiossidante.

Normalmente il riduttore è fornito dalla **Dinamic Oil S.p.A.** senza olio lubrificante, salvo espressa richiesta da parte del Cliente.

## *3.1 - Supply condition*

*The gear units are supplied with a protective painted coating capable of resisting normal environmental conditions, with the machine either inside and outside. This painted coating can also be of a synthetic type if necessary.*

*If the gear units have to be used in particular environmental conditions they must be treated with special coatings.*

*All the machined external parts of the gear unit (ends of hollow and non-hollow sharfts, spigots, support surfaces, etc.) are protected with rust- inhibitor oil (Sealtek), when sea freighted only. The internal parts of gear unit casing and the drive are also protected with rust- inhibitor oil.*

*The gear unit is normally supplied by **Dinamic Oil S.p.A.** without lubricating oil, except when expressly requested by the customer.*

# 4 Imballo, movimentazione, ricevimento, ricovero

# *Packing, handling, receiving, storage*

## 4.1 - Imballo

## *4.1 - Packing*

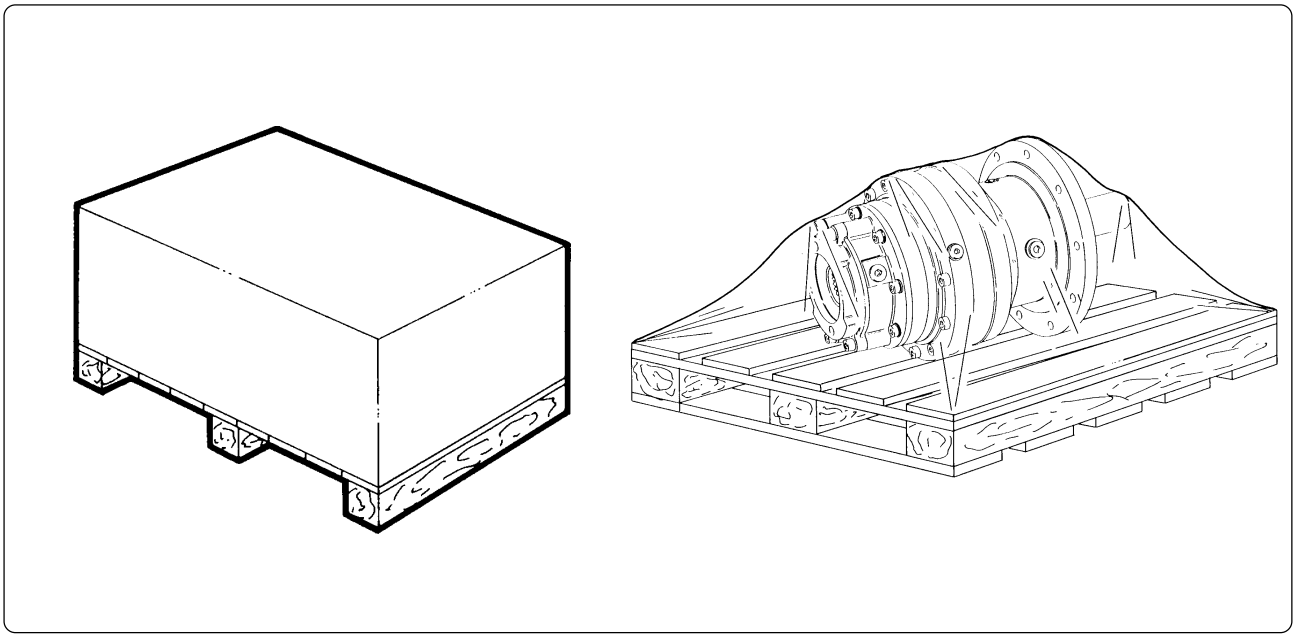

Fig. 4.1.1

**ATTENZIONE!!**

Dietro richiesta del Cliente la **Dinamic Oil S.p.A**. può fornire il riduttore imballato in casse o su pallets.

Tutti i riduttori **Dinamic Oil S.p.A.** (salvo diverse richiesta da parte del Cliente) sono imballati con imballi atti a resistere in normali ambienti industriali.

***ATTENTION!!***

*As requested by the customer, **Dinamic Oil S.p.A.** can supply the gear unit packed in a crate or on a pallet.*

*All **Dinamic Oil S.p.A.** gear units (unless requested otherwise by the customer) are packed using packaging designed to withstand normal industrial conditions.*

## 4.2 - Movimentazione

Nota

Il peso riportato sulla targhetta di identificazione è il peso netto del riduttore, cioè privo degli eventuali accessori (freni, flangie motore, flangie ruota ecc…). Si consiglia pertanto, per avere il peso totale del riduttore + accessori, di applicare un sovrappeso indicativo massimo di circa 40 kg per accessori in entrata, mentre per quelli in uscita di applicare il sovrappeso (in relazione alla dimensione del riduttore) pari ad un 8% del suo peso.

Utilizzare mezzi di idonea portata per il sollevamento e la movimentazione dell'imballo, nonché adeguati al tipo dell'imballo.

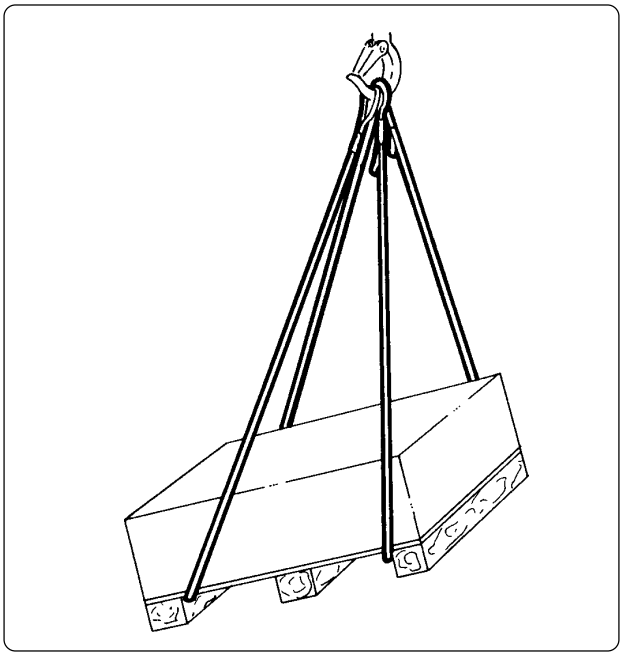

Fig. 4.2.1

Non capovolgere né inclinare l'imballo durante il suo sollevamento o trasporto (fig. 4.2.1).

Se l'imballo è scaricato con carrello elevatore, assicurarsi che il suo peso sia bilanciato sulle forche (fig. 4.2.2).

## *4.2 - Handling*

*Note*

*The weight indicted on the identification plate is the gear unit's net weight, i.e. without any accessories (brakes, engine flanges, wheel flanges etc.).*
*To calculate the total weight of the gear unit plus accessories, you are advised to add a further 40 kg for input accessories, while for output accessories (in relation to the dimensions of the gear unit) you should add 8% of the unit's weight.*

*Use suitable means of transport to hoist and move the packed unit, taking into account the type of packing.*

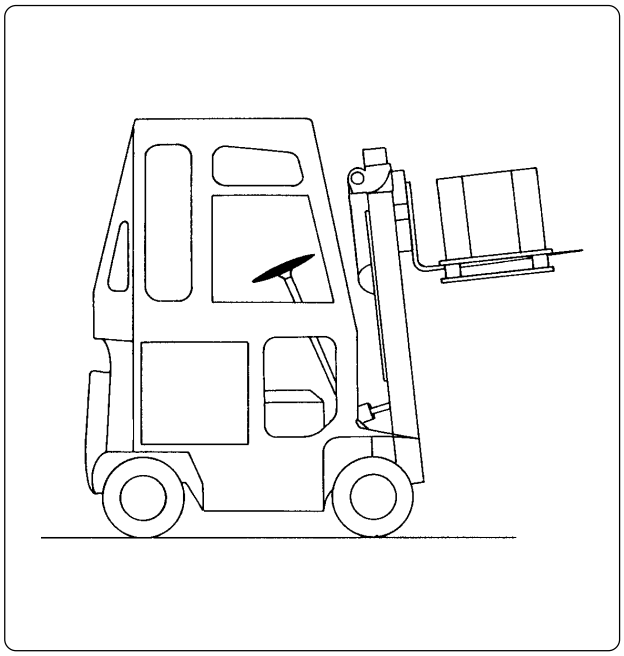

Fig. 4.2.2

*Do not tilt or turn the package upside down while lifting or during transport (fig. 4.2.1).*

*If the package is unloaded from fork-lift truck, make sure the weight is balanced on the forks (fig. 4.2.2).*

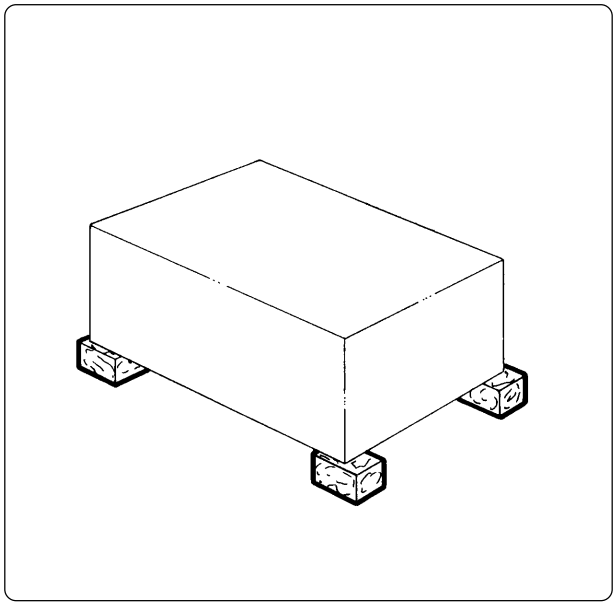

Fig. 4.2.3

Se necessario predisporre appositi travetti di legno da posizionarsi sotto all'imballo per facilitarne il sollevamento (fig. 4.2.3).

Se l'imballo è scaricato tramite paranco o gancio di sollevamento accertarsi che il carico sia bilanciato nell'imbracatura. Utilizzare accessori di sollevamento idonei ed a norma di legge. Per i riduttori spediti su pallets verificare che gli accessori per il sollevamento non danneggino la macchina (fig. 4.2.4).

Durante il sollevamento ed il posizionamento dell'imballo prestare attenzione ad eventuali oscillazioni del carico al fine di evitare impatti ed urti.

## 4.3 - Ricevimento

Al ricevimento del riduttore verificare sempre che lo stesso non abbia subito danni durante il trasporto e che corrisponda alle caratteristiche richieste al momento dell'ordine.

L'apertura dell'imballo deve essere effettuata tagliando il termoretraibile.

Nel caso siano riscontrati danni, difetti o mancanze, rivolgersi immediatamente all'Ufficio Commerciale della **Dinamic Oil S.p.A. - Servizio Riduttori** - via telefono (0039-059-315452) o tramite fax (0039-059-450590).

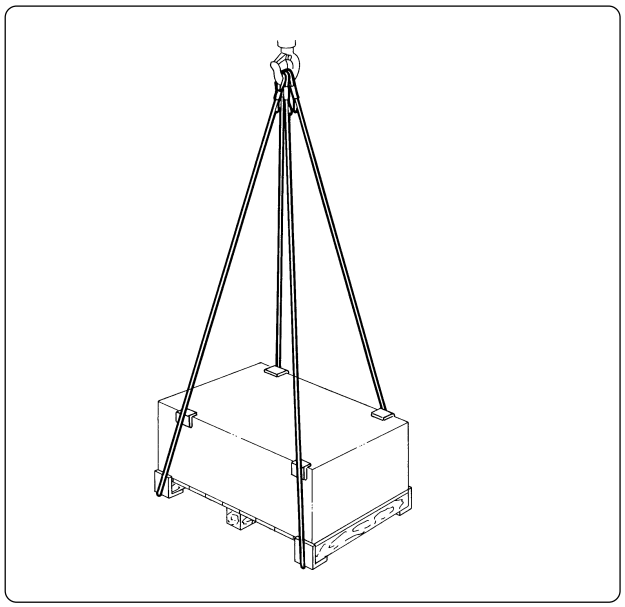

Fig. 4.2.4

*If necessary lay out wooden blocks in position underneath the packed unit to make it easier to lift (fig. 4.2.3).*

*If the packages are unloaded with a hoist and, in any case, with a hook, make sure that the load is balanced in the sling. Use lifting accessories that are suitable and legally certified. For the gears unit shipped on pallets, make sure that the lifting accessories do not damage the machine (fig. 4.2.4).*

*While hoisting the unit and positioning it, take care not to let it swing too much to prevent it hitting something.*

## *4.3 - Receiving*

*On receiving the gear unit, always check that it has not been damaged in transit and that all the features correspond with those requested when the order was placed.*

*To open the packaging, cut the heat sealed wrapping.*

*If any damages, faults or missing pieces are noted, contact **Dinamic Oil S.p.A.** - Sales Office, immediately: **Gear units section** - by phone (0039-059-315452) or by fax (0039-059-450590).*

## 4.4 - Movimentazione della macchina senza imballo

**ATTENZIONE!!**

Prima di rimuovere il riduttore dall'imballo assicurarlo con gli accessori di sollevamento per evitare ribaltamenti o scivolamenti dello stesso.

Rimuovere anche i travetti di legno posti sul fondo dell'imballo per assicurarne la stabilità durante la spedizione.

Sollevare il riduttore prestando attenzione a non sbilanciare il carico durante la manovra.

## *4.4 - Handling the machine withouth packing*

***ATTENTION!!***

*Before removing the gear unit from the packaging fasten it to the hoisting accessories to prevent the unit tipping over or sliding.*

*Remove the wooden blocks placed underneath the packaging too, to ensure the unit is stable during transit.*

*Lift the gear unit making sure the load remains balanced during the various operations.*

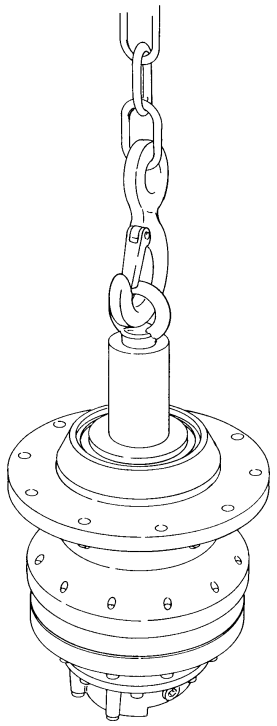

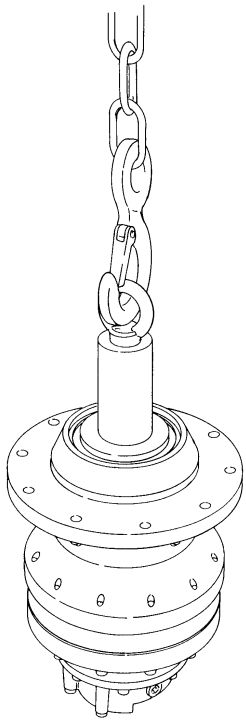

Fig. 4.4.1

## 4.5 - Rimessaggio

Nel caso si debba immagazzinare la macchina per un periodo superiore a 2 mesi occorre attenersi alle seguenti prescrizioni:

- proteggere alberi e centraggi con una pellicola di grasso o liquido protettivo anticorrosivo;
- riempire totalmente il riduttore e l'eventuale freno lamellare con idoneo olio (vedi par. 7.3);
- accertarsi che il luogo di immagazzinamento sia asciutto e con una temperatura compresa tra -5 °C e + 30 °C;

## *4.5 - Storage*

*If the unit must be stored for a period of more than 2 months, the following procedure must be carried out:*

- *protect the shafts and the spigots with a film or grease or rust-inhibitor liquid;*
- *completely fill the gear unit and any multi-disk brake with suitable oil (see paragraph 7.3);*
- *make sure the storage area area is dry and kept at a temperature of between -5° and + 30 °;*

- tenere il riduttore lontano da polvere, sporcizia ed umidità;
- non sovrapporre i riduttori;
- non camminare sull'imballo né posizionarvi sopra altri particolari (fig. 4.5.1);
- non immagazzinare altro materiale all'interno dell'imballo;
- tenere lontano l'imballo dalle zone di passaggio (fig. 4.5.2);
- possibilmente mettere dei travetti di legno tra l'imballo ed il pavimento.

Nota

Nel caso si debba prolungare oltre i 6 mesi il periodo di rimessaggio del riduttore decade l'efficienza delle tenute rotanti. Si consiglia pertanto un controllo periodico delle stesse facendo ruotare gli ingranaggi interni manualmente tramite l'albero di entrata. In presenza di freno lamellare negativo, sbloccare il freno con pompa idraulica o simile (per pressione di apertura freno vedi par. 8.1).
E' consigliato sostituire le guarnizioni all'atto dell'avviamento.

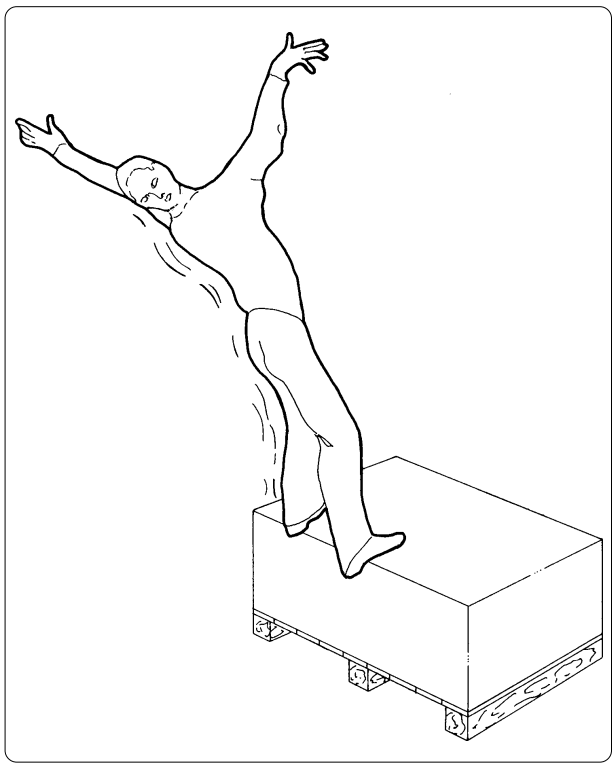

Fig. 4.5.1

- *keep the gear unit free of dust, dirt and dampness;*
- *do not place one gear unit on top of another;*
- *do not stand on the packaging or place anything on top of it (fig. 4.5.1);*
- *do not store other materials inside the packaging;*
- *do not obstruct walkways with the packaging (fig. 4.5.2);*
- *if possible, place wooden blocks between the packaging and the pavement.*

*Note*

*If the gear unit must be kept in storage for more than 6 months, the efficiency of the rotary seals will deteriorate. You are therefore advised to check them regularly by rotating the internal gears manually using the input shaft. If the unit has negative laminar brakes, release the brake with the hydraulic pump or similar (for brake opening pressure see para. 8.1).*

*It is advisable to replace the gasket on starting up the machine.*

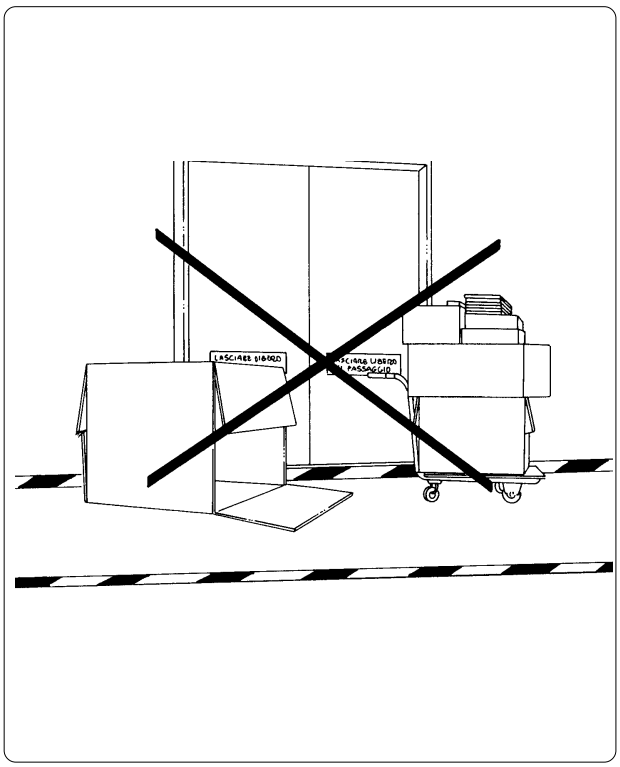


Fig. 4.5.2

# 5 Installazione
# *Installation*

## 5.1 - Prescrizioni generali

L'installazione del riduttore deve essere eseguita prestando particolare attenzione a quanto sotto riportato:

1) verificare che i tappi dell'olio, di sfiato, di livello e di scarico siano in posizione corretta (la loro posizione varia secondo la posizione di montaggio - vedi par. 2.2 - Posizioni di montaggio);
2) controllare che i freni siano opportunamente collegati ai lori rispettivi circuiti di comando. I freni a comando idraulico devono essere spurgati nel circuito idraulico;
3) il riduttore è consegnato con flangia per l'accoppiamento di motori elettrici, idraulici e ad aria;
4) sarà compito del Cliente predisporre le protezioni adatte agli alberi di ingresso e uscita, oltre che giunti, pulegge e cinghie secondo le norme di sicurezza vigenti nel Paese di installazione;
5) se il riduttore dovrà essere impiegato all'esterno proteggerlo con vernici anticorrosive, proteggere i paraolii e le relative guide di scorrimento con grasso idrorepellente. Riparali dalle intemperie.

Nota

I riduttori Dinamic Oil vengono forniti normalmente senza olio, pertanto la scelta del lubrificante va effettuata dall'utilizzatore secondo le indicazioni riportate nella tabella del paragrafo 7.3.

## *5.1 - General instructions*

*The installation of the gear unit must be carried out with attention to the following points:*

*1) check the oil, the breather pipe, the level and the discharge caps are all correctly in position (their position varies according to the installation position - see para. 2.2 - Installation positions);*
*2) check that the brakes are connected correctly to their respective control circuits. The hydraulically-controlled brakes must be bled in the hydraulic circuit;*
*3) the gear unit is delivered with a flange for coupling the electric, hydraulic and air motors;*
*4) the customer is responsible for installing suitable guards for the input shafts, as well as couplings, pulleys, belts, etc., according to the current safety standards in force in the country where the machine is installed;*
*5) if the gear unit is going to be used outside, protect the oil splash guards and the relative runners with water-repellent grease. Keep the machine sheltered in case of bad weather.*

*Note*

*Dinamic Oil gear units are normally supplied without oil, so the user can decide on which lubricant to use according to the information in the chart in para.7.3.*

## 5.2 - Installazione riduttori con fissaggio a flangia

La struttura a cui vanno fissati i riduttori deve essere rigida, ortogonale all'asse azionato ed accuratamente pulita.

I centraggi ed i piani di accoppiamento devono essere senza ammaccature ed accuratamente puliti.

## *5.2 - Installing flange fastening gear units*

*The spigots and the coupling surfaces of the gear unit must be without any dents and clean.*

*The spigots and the coupling surfaces must be stain-free and carefully cleaned.*

Per ottenere il perfetto allineamento tra l'albero azionato e l'albero di uscita riduttore è opportuno effettuare scrupolosamente i controlli più sopra descritti, soprattutto in caso di riduttori con uscita femmina cava che non possono portare nessun carico radiale o assiale.

Lubrificare i centraggi del riduttore ed il loro relativo alloggiamento con grasso o olio.

Inserire il riduttore nella sua sede ed orientarlo in posizione corretta.

Montare le spine di riferimento nelle loro sedi, serrare le viti di fissaggio (classe minima raccomandata 8.8) applicando una coppia di serraggio (come da tabella - Coppie di serraggio - sottoparagrafo 8.1.1) verificando che le stesse siano compatibili con la controparte (dadi, strutture di fissaggio).

Nota

Se l'applicazione comportasse arresti ed avvii frequenti, forti urti, inversioni o quando si supera il 70% della coppia massima ammissibile la **Dinamic Oil S.p.A**. consiglia di impiegare viti di classe 10.9 o 12.9.

Nota

Durante l'installazione può verificarsi che, nei riduttori ortogonali con albero maschio all'ingresso, l'asse sia deviato rispetto alla sua posizione ideale. Pertanto si consiglia di:

- misurare il disallineamento esistente (nel caso di collegamenti tramite giunti in grado di recuperare disallineamenti), verificare il disallineamento accettabile dal giunto e nel caso il valore sia maggiore, spessorare il motore per rientrare nei giochi ammissibili;
- di procedere allineamento del motore tramite spessoramenti (nel caso di collegamento tramite organi meccanici che non consentono recupero di giochi).

## 5.3 - Installazione riduttori con fissaggio a piede

Prima di procedere alla installazione:

- accertarsi che i piedi appoggino su di una superficie piana ed in caso contrario provvedere al loro spessoramento poiché un errato appoggio degli stessi può provocarne la rottura. Per fissare i piedi si consiglia di utilizzare viti di classe minimo 8.8 serrate con coppia (per le coppie di serraggio vedi sottoparagrafo 8.1.1).

*To align the operated shaft and the output shaft perfectly, the aforementioned checks should be carried out rigorously, particularly if the gear unit has a hollow, female output which cannot carry any radial or axial loads.*

*Lubricate the spigots and their relative housings with grease or oil.*

*Insert the gear unit in the seating and position it correctly.*

*Fit the reference pins in their seats, tighten the attachment bolts (reccomended minimum class 8.8), applying torque (as indicated in the table - torque setting- sub-paragraph 8.1.1) making sure that such torque settings are compatible with he other parts (nuts, structure).*

*Note*

*The **Dinamic Oil S.p.A.** reccomends to use class 10.9 or 12.9 bolts where the application involves frequent stops and starts, severe impacts, reversals or when it exceeds 70% of the maximum tolerated torque.*

*Note*

*During installation, for right angle gear units with a male input shaft, the input axis may not be in the ideal position. To solve this problem, it is reccomended to do the following:*

- *measure the existing misalignement (for connections using couplings which can compensate for the misalignement, check the acceptable misalignement from the coupling and, if the value is greater, shim the motor to obtain the acceptable clearances;*
- *align the motor using shims (for a connection with mechanical devices that cannot be used to compensate for the clearances).*

## *5.3 - Installing leg fastening gear units*

*Before proceeding with the installation:*

- *make sure the legs are standing on a level surface and if not have them thickened since a bad support could cause damage to the machine. To fasten the legs, you are advised to use screws of a minimum class of 8.8, tightened with torque (for the tightening torques see subpara. 8.1.1).*

## 5.4 - Riduttori con montaggio pendolare

I giunti di serraggio **non vengono** normalmente forniti dalla Dinamic Oil perciò per la corretta installazione e le caratteristiche tecniche vi rimandiamo alle specifiche contenute nella documentazione del costruttore del giunto di serraggio.

### 5.4.1 - Installazione

- Pulire accuratamente e sgrassare la superficie interna dell'albero riduttore e l'albero maschio con cui va accoppiato;
- calzare l'uscita femmina del riduttore all'albero maschio facendo attenzione di non esercitare elevate forze assiali (accoppiamento H con h), quando presente, sull'albero femmina svitare il tappo che consente lo sfiato dell'aria avendo cura di richiudere il foro col medesimo tappo per evitare infiltrazioni di umidità;
- posizionare la mezzeria del giunto in corrispondenza della mezzeria del tratto utile dell'albero (vedi figura 5.4.1) misurando la quota "a";
- avvitare le viti (in senso circolare) in più volte, fino al raggiungimento **della coppia di serraggio prevista dal fornitore del giunto**, con chiave dinamometrica.

### 5.4.2 - Disinstallazione

- Svitare gradualmente le viti del giunto in senso circolare;
- spostare assialmente, qualora necessario, il giunto nella posizione più conveniente allo smontaggio;
- sfilare il riduttore dalla macchina (pompando olio a bassa pressione servendosi, quando presente, del foro filettato sull'albero del riduttore);
- sfilare il giunto di serraggio.

### 5.4.3 - Braccio di reazione

L'ancoraggio del braccio di reazione deve essere ammortizzato. Ogni ostruzione a movimenti che non siano la sola rotazione devono essere evitati. Ciò per impedire carichi assiali sul riduttore. Questa soluzione non supporta alcun tipo di carico assiale.

**ATTENZIONE!!**

Quando la macchina è in azione, la zona intorno al riduttore, per un raggio pari alla lunghezza del braccio di reazione, deve essere considerata pericolosa per l'operatore o chiunque dovesse trovarsi nelle vicinanze, pertanto opportunamente segnalata e/o protetta.

## *5.4 - Shaft mounted gearboxes*

*Shrink disks normally **are not a supply** from Dinamic Oil so for the correct fitting and technical features we address you to the shrink disk manufacturer literature.*

### *5.4.1 - Installation*

- *Carefully clean and remove grease from the inner surface of the gearbox hallow female, the same should be done on the male shaft that will mate it;*
- *fit the gearbox hallow female onto the male shaft paying attention to avoid axial (trust) load (mating class is H and h), when exist, unscrew the breather plug on the female to let out the air during fitting, be sure to plug back the hole to prevent humidity and rust inside the female;*
- *set the centerline of the shrink disk in correspondence to the center distance of the calibrated shaft surface (picture 5.4.1) by measuring "a" dimension;*
- *tighten the bolts (following a circle sense sequence) in more sequences until reaching **the tightening torque indicated by the shrink disk manufacturer**, the use of a torque adjustable spanner.*

### *5.4.2 - Disassembly*

- *Gradually unscrew shrink disk bolts following a circle sense sequence;*
- *move back or forth the shrink disk when necessary to the most convenient position for the disassembly;*
- *slip off the gearbox from the mal. (when exist, you can pressurize with low pressure oil by the breather plug on the hallow female to ease the disassembly);*
- *slip off the shrink disk.*

### *5.4.3 - Torque arm*

*The torque arm anchorage must be amortized. Any obstruction to its movement than pure reaction against must be avoided. This is to prevent from any trust load on the gearbox. This solution does not support trust load.*

***ATTENTION!!***

*When the machine is operating, the area around the gearbox on a radius equal to the torque arm length, must be considered danger zone for any operator in the near, so duly highlighted and or protected.*

## 5.5 - Montaggio motore e accessori

### 5.5.1 - Montaggio del motore

Durante la fase di assemblaggio del riduttore al motore è obbligatorio lubrificare l'accoppiamento con un leggero velo di grasso o lubrificante anti-grippaggio.

Inserire accuratamente l'albero motore nell'accoppiamento prestando attenzione che il centraggio del motore si accoppi perfettamente con il centraggio del riduttore.

Dopo avere verificato che il motore sia perfettamente centrato serrare tutte le viti applicando una coppia come da tabella al sottoparagrafo 8.1.1.

### 5.5.2 - Montaggio accessori

Per il montaggio degli accessori (pignoni, pulegge o giunti) utilizzare sempre attrezzature adeguate onde evitare grippaggi oppure riscaldare il pezzo a 80° - 100 °C.

Occorre inoltre:

- lubrificare le scanalature con un sottile velo di grasso o lubrificante anti-grippaggio
- serrare tutte le viti di fissaggio applicando una coppia di serraggio come da tabella al sottoparagrafo 8.1.1.

## *5.5 - Motor and accessory assembly*

### *5.5.1 - Motor and accessory assembly*

*While assembling the gear unit on the motor, the coupling must be lubricated with a thin layer of grease or with a no-grip lubricant.*

*Carefully insert the motor shaft in to the coupling and make sure that the motor spigot perfectly matches the gear unit pigot.*

*After checking that the motor is properly centered, tighten all the attachment bolts applyng the torque indicated in the table to sub-paragraph 8.1.1.*

### *5.5.2 - Accessory assembly*

*To mount accessory (pinions, pulleys or couplings) use the suitable equipment avoid seizing; as an alternative, heat the piece to 80° -100° C.*

*Moreover must be:*

- *lubricate the grooves with a thin layer of grease or a no-grip lubricant*
- *stighten attachments bolts applyng the torque indicated in the table to sub paragraph 8.1.1.*

# 6 Funzionamento freni
# *Brake start-up*

## 6.1 - Freno lamellare negativo

Nota

Questo tipo di freno è usato solo come freno di stazionamento od in situazioni particolari, come freno di emergenza.

- Collegare i raccordi del circuito idraulico dell'impianto al foro comando freni - vedi par. 2.2 - Posizioni di montaggio.

- Dare pressione al circuito idraulico e spurgare i freni svitando leggermente il raccordo del comando freno mantenendo la pressione fino a quando non uscirà più aria ma solo olio. Infine riserrare il raccordo.

## *6.1 - Negative multi-disk brake*

*Note*

*The negative multi-disk brake is used only as a parking brake, or in special situation as an emergency brake.*

- *Connect the fittings of the system hydraulic cirsuit to the brake control hole - see paragraph 2.2 - Assembly positions.*

- *Pressurize the hydraulic circuit and then bleed all brake; slightly unsrew the brakr control fitting, and maintain pressure until only oil is expeloled without any air. Then re-tghten the fitting.*

# 7 Lubrificazione
# *Lubrication*

## 7.1 - Lubrificazione del riduttore

I riduttori della **Dinamic Oil S.p.A.** normalmente sono forniti privi di olio. La scelta del lubrificante deve essere effettuata dall'utilizzatore secondo le indicazioni della tabella al par. 7.3.

### 7.1.1 - Riempimento e livello

I riduttori sono dotati di tappi di livello, sfiato, carico, scarico dell'olio e la loro collocazione è diversa secondo la configurazione della installazione. Verificare l'esatta collocazione dei tappi con l'ausilio degli schemi riportati al par. 2.2 - Posizioni di montaggio.

- Svitare i tappi di livello e di carico;
- immettere l'olio nel riduttore;
- quando l'olio fuoriesce dal foro di livello, rimontare i tappi;
- fare compiere qualche giro al riduttore per eliminare eventuali sacche d'aria;
- infine ricontrollare i vari livelli.

## 7.2 - Lubrificazione dei freni lamellari

I freni lamellari della **Dinamic Oil S.p.A.** sono forniti privi di olio. La scelta del lubrificante deve essere effettuata dall'utilizzatore seguendo, possibilmente, le indicazioni che la **Dinamic Oil S.p.A.** fornisce per quanto riguarda le caratteristiche (vedi par. 7.3).
Per la lubrificazione del freno lamellare la **Dinamic Oil S.p.A.** consiglia di utilizzare olii minerali molto resistenti al calore ed all'invecchiamento con viscosità ISO VG 32 ed indice di viscosità pari o superiore a 95.

Nota

Gli olii idraulici presentano generalmente dette caratteristiche e pertanto sono considerati idonei.

## *7.1 - Gear unit lubrication*

*The **Dinamic Oil S.p.A.** gear unit is supplied without oil .*
*Therefore the user must the lubricant according to what is indicated in table shown in paragraph 7.3.*

### *7.1.1 - Filing and level*

*IThe gear units are equipped with oil level, breather, filer and drain plugs and their position changes according to the installation configuration.*
*Check the exact position of the plugs using the diagrams on paragraph 2.2 - Assembly positions.*

- *Unscrew the level-filler plugs;*
- *put oil into the gear unit;*
- *when this oil flows out of the level hole, replace the plugs;*
- *turn the gear unit a few times to eliminate any air pocket;*
- *then check the various levels.*

## *7.2 - Multi-disk brake lubrication*

*The **Dinamic Oil S.p.A.** multi-disk brakes are supplied whitout oil.*
*The user must select the lubricant feature (see par. 7.3).*
*To lubricate the multi-disdk brake unit, the **Dinamic Oil S.p.A.** recommends using mineral oils with enhanced heat and aging resistance and viscosity ISO VG 32, with a viscosity index greater than or equal to 95.*

*Note*

*Hydraulic oils are suitable, in general.*

### 7.2.1 - Riempimento e livello dei freni lamellari

I freni lamellari sono dotati di tappi di livello, carico, scarico dell'olio e la loro collocazione varia a seconda della configurazione della installazione.

Verificare l'esatta collocazione dei tappi con l'ausilio degli schemi riportati al par. 8.1.

- Svitare i tappi di livello e di carico;
- immettere l'olio nel freno;
- quando l'olio fuoriesce dal foro di livello, rimontare i tappi.
- Fare compiere qualche giro al freno per eliminare eventuali sacche d'aria;
- infine ricontrollare i vari livelli.

### *7.2.1 - Multi-disk brake filling and level*

*The multi-disk brakes are equipped with oil level, filler and drein plugs and their position changes according to the installation configuration.*

*Check the exact position of the plugs using the diagrams on paragraph 8.1.*

- *Unscrew the level/ filler plugs;*
- *put oil into the brake;*
- *when this oil flows out of the level hole, replace the plugs.*
- *Turn the brake a few times to eliminate any air pockets;*
- *then check the various levels.*

## 7.3 - Tabella dei lubrificanti consigliati

## *7.3 - Recommended lubricant table*

| Lubrificante<br>*Lubricant* | – 20 C + 5 C<br>IV 95 min | + 5 C + 30 C<br>IV 95 min | + 30 C + 50 C<br>IV 95 min | - 30C + 65 C<br>IV 95 min |
|---|---|---|---|---|
| ESSO | Spartan<br>EP 100 | Spartan<br>EP 100 | Spartan<br>EP 320 | Compressor<br>oil LG 150 |
| AGIP | Blasia | 100 Blasia | 150 Blasia 320 | Blasia S 220 |
| ARAL | Degol BG 100 | Degol BG 150 | Degol BG 320 | Degol BS 220 |
| BP MACH | GR XP 100 | GR XP 150 | GR XP 320 | SGR XP 220 |
| CASTROL | Alpha SP 100 | Alpha SP 150 | Alpha SP 320 | Alpha SN 6 |
| ELF | Reductelf<br>SP 100 | Reductelf<br>SP 150 | Reductelf<br>SP 320 | Oritis 125 MS<br>Syntherma P 30 |
| CHEVRON | Non leaded gear<br>compound 100 | Non leaded gear<br>compound 150 | | Non leaded gear<br>compound 320 |
| GULF | | EP lubricant<br>HD 150 | EP lubricant<br>HD 320 | |
| I.P. | Mellana 100 | Mellana 150 | Mellana 320 | Telesia oil 150 |
| MOBIL | | Mobilgear 629 | Mobilgear 632 | Glycoyle 22/30<br>SHC 630 |
| SHELL | Omala oil 100 | Omala oil 150 | Omala oil 320 | Tivela oil SA |
| TOTAL | Carter EP 100N | Carter EP 150 | Carter EP 320 N | |
| KLUBER | Lamora 100 | Lamora 150 | Lamora 320 | |
| ISO 3448 | VG 100 | VG 150 | VG 320 | VG 150-200 |

## 7.4 - Vaso di espansione

**ATTENZIONE!!**

Verificare che il vaso di espansione sia stato posto più in alto della parte superiore del riduttore.

## *7.4 - Expansion tank*

***ATTENTION!!***

*Make sure the expansion tank is istalled higher than the top part of the gear unit.*

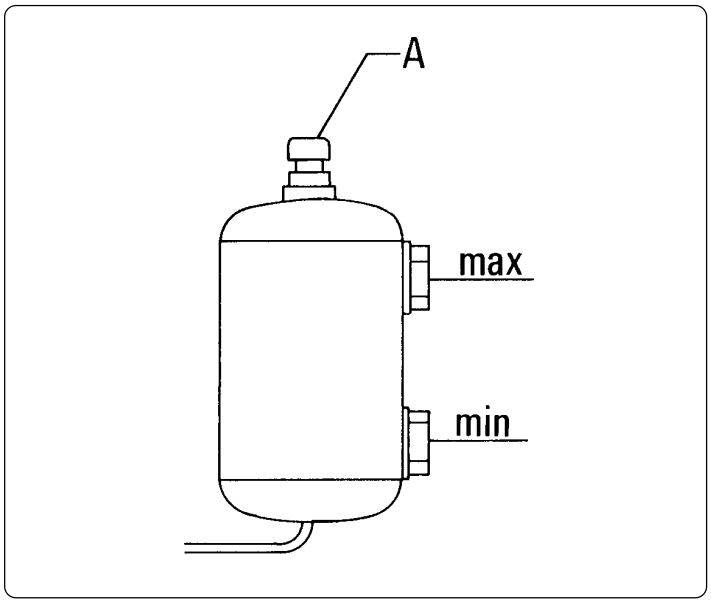


Fig. 7.4.1

Per l'applicazione del vaso di espansione procedere come segue (fig. 7.4.1):

- rimuovere il tappo "A"
- togliere uno dei tappi dalla parte superiore del riduttore (solo in fase di riempimento e per aumentarne la ventilazione)
- reinserire il tappo solo quando l'olio sale alla sommità del tappo aperto sulla parte superiore del riduttore
- continuare il riempimento finché l'olio non arriva a posizionarsi sopra la scritta "min." posta sul serbatoio, superandola anche di poco
- reinserire il tappo
- non arrivare mai con il livello sulla scritta "max." per lasciare spazio alla espansione dell'olio
- fare compiere qualche giro al riduttore per qualche minuto al fine di eliminare eventuali sacche di aria
- ricontrollare i vari livelli.

*To apply the expansion tank, proceed as follows (see figure 7.4.1):*

- *remove the cap "A"*
- *remove one of the caps from the upper part of the gear unit (only during the refilling phase and to increase ventilation)*
- *only replace the cap when the oil has reached the top of the open cap on the upper part of the gear unit*
- *continue refilling the unit until the oil level is above the "min." level indicated on the tank, even if it is only slightly over the level*
- *replace the cap*
- *never fill the oil up to the "max." level indicated on the tank, as space is needed for the oil to expand*
- *run the gear unit for a few minutes to eliminate any air pockets*
- *check the various levels.*

# 8 Verifiche
# *Checks*

## 8.1 - Controlli prima dell'avviamento

Prima di effettuare l'avviamento della macchina occorre verificare quanto segue.

- Verificare che tutti i tappi dell'olio siano nella corretta posizione (vedi par. 2.2 - posizioni di montaggio);
- controllare che tutti i livelli dell'olio siano esatti;
- controllare che tutti gli ingrassatori siano carichi di grasso;
- controllare che la pressione di esercizio sia sufficiente ad aprire completamente il freno lamellare. Questo al fine di evitare surriscaldamenti e usure precoci dei dischi freno.

## *8.1 - Pre-start-up checks*

*Before starting the machine check the following.*

- *Check that all the oil plugs are in the correct position (see paragraph 2.2 - assembly positions);*
- *check that all oil levels are correct;*
- *check that all the grease guns are full of grease;*
- *check that the operating pressure is sufficient to fully open the multi-disk brake.*
  *This to avoid overheating and any premature wear of brake disks.*

*FRENO "F 1." Brake*

*Per motori del tipo orbitale*
*For orbit motors*

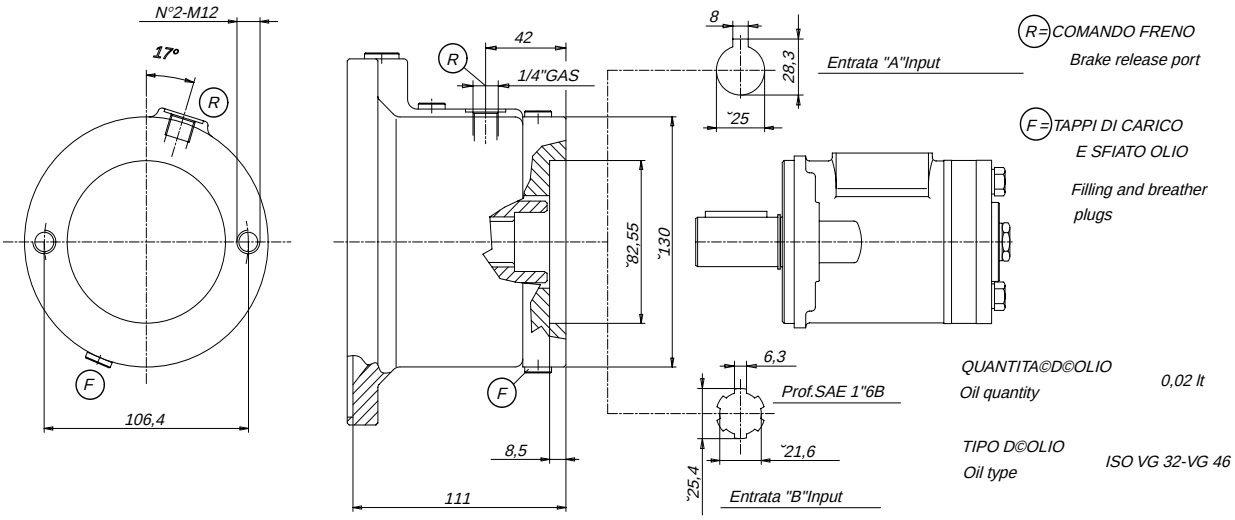


| *PER RIDUTTORI:*<br>*For gearboxes:* |
|---|
| *RE 111/112/113*<br>*RE 211/212/213*<br>*RE 241/242/243*<br>*RE 312/313 -RE 512/513*<br>*RE 812/813 -RE 1013*<br>*RE 1513 -RE 2513*<br>*GB 352/353 -GB 602/603* |

*DATI TECNICI:* *(I VALORI DELLA COPPIA STATICA SONO VALIDI PER UNA PRESS.DI 0 bar ALL' INTERNO DEL FRENO)*
*Technical data:* *(Values of the static torque are valid for a pressure of 0 bar into the brake)*

| *TIPO Type* | | *F 12* | *F 13* | *F 14* | *F 16* |
|---|---|---|---|---|---|
| *COPPIA STATICA*<br>*Static torque* | *daNm* | *18-20* | *27-30* | *37-40* | *57-60* |
| *PRESS.APERTURA*<br>*Release pressure* | *bar* | *15* | *20* | *25* | *35* |
| *PRESS.MAX LAVORO*<br>*Max working pressure* | *bar* | *250* | | | |
| *VELOCITA' MAX IN INGRESSO*<br>*Max input speed* | *rpm* | *700* | | | |

Fig. 8.1.1

*FRENO "F 2." Brake*

*Per motori del tipo orbitale*
*For orbit motors*

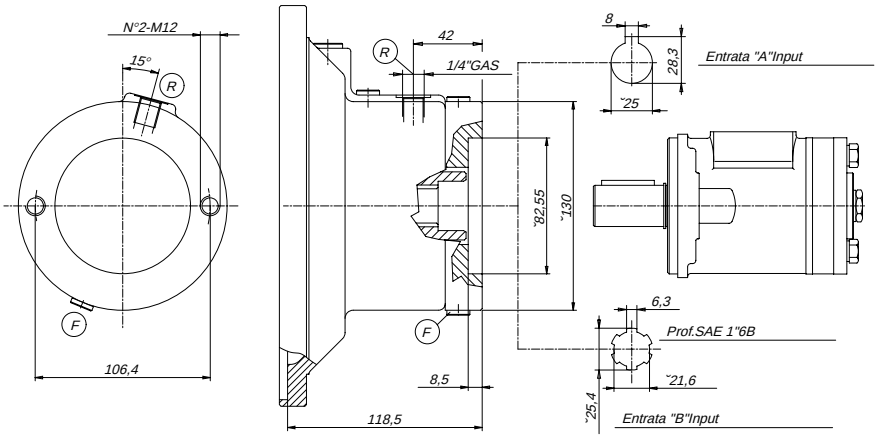


R = *COMANDO FRENO*
*Brake release port*

F = *TAPPI DI CARICO E SFIATO OLIO*
*Filling and breather plugs*

*QUANTITA'D'OLIO*
*Oil quantity* — *0,02 lt*

*TIPO D'OLIO*
*Oil type* — *ISO VG 32-VG 46*

| *PER RIDUTTORI:*<br>*For gearboxes:* |
|---|
| *RE 311* |
| *RE 511* |
| *RE 1012* |
| *RE 1512* |

*DATI TECNICI:* *(I VALORI DELLA COPPIA STATICA SONO VALIDI PER UNA PRESS.DI 0 bar ALL'INTERNO DEL FRENO)*
*Technical data:* *(Values of the static torque are valid for a pressure of 0 bar into the brake)*

| *TIPO/Type* | | *F 22* | *F 23* | *F 24* | *F 26* |
|---|---|---|---|---|---|
| *COPPIA STATICA*<br>*Static torque* | *daNm* | *18-20* | *27-30* | *37-40* | *57-60* |
| *PRESS. APERTURA*<br>*Release pressure* | *bar* | *15* | *20* | *25* | *35* |
| *PRESS. MAX LAVORO*<br>*Max working pressure* | *bar* | *250* | | | |
| *VELOCITA' MAX IN INGRESSO*<br>*Max input speed* | *rpm* | *700* | | | |

Fig. 8.1.2

## FRENO "F5." Brake

*Versione "ST"per alte velocita' e frenature sia statiche sia dinamiche*

*"ST" Version for high speeds and static+dynamic braking*

*PER RIDUTTORI:* *RE 111/112/113 -RE 211/212/213 -RE 312/313 -RE 512/513 -RE 812/813*

*For gearboxes:* *RE 1013 -RE 1513 -RE 2513 -GB 352/353 -GB 602/603*

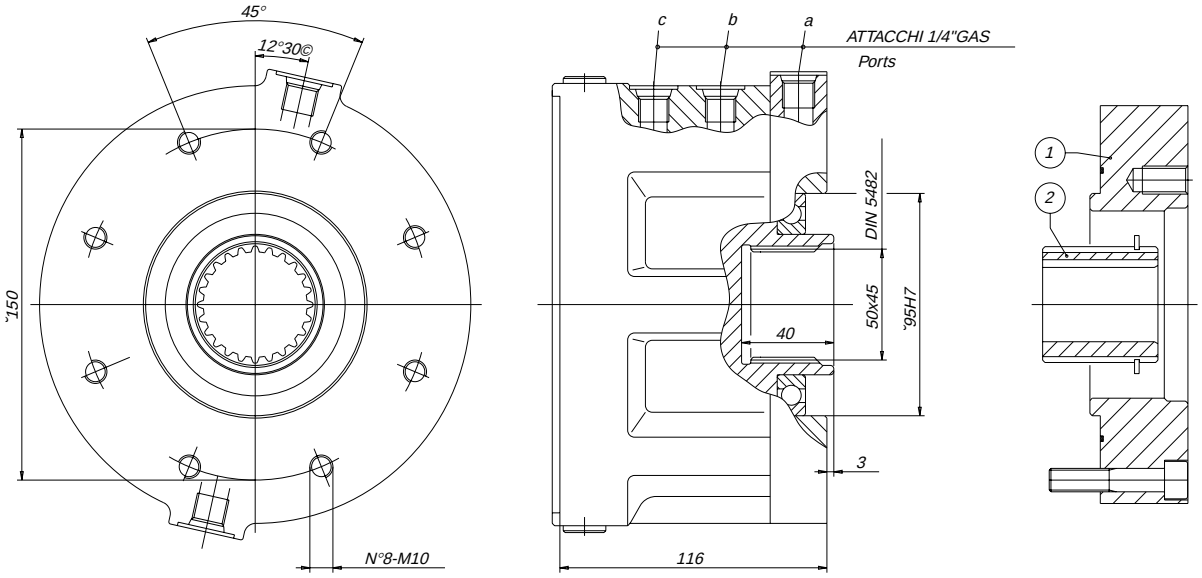


| TIPO/Type | | F501 | F502 | F503 | F504 | F506 |
|---|---|---|---|---|---|---|
| Coppia frenante statica - static braking torque | daNm | 10 | 20 | 30 | 40 | 60 |
| Coppia frenante dinamica-dynamic braking torque | daNm | 7 | 14 | 21 | 28 | 42 |
| Press. apertura - min.release press. | bar | 12 | 18 | 25 | 30 | 30 |
| Press. massima - max. pressure | bar | 250 | | | | |
| Velocita' max in ingr.-max input speed CONT. | rpm | 3000 | | | | |
| Velocita' max in ingr.-max input speed INT. | rpm | 4500 | | | | |

*IMPIEGO STATICO DEL FRENO*

*Static brake using*

*a - livello olio freno*
*- oil level of brake*

*b - comando freno*
*- brake releasing port*

*IMPIEGO DINAMICO DEL FRENO*

*Dinamic brake using*

*a - attacco per il raffreddamento del freno con olio idraulico*
*- port for cooling brake by hydr.oil.*
*- portata - flow: 2,5-3 l/min*

*b - comando freno - brake releasing port*

*c - attacco al serbatoio - port for connection to tank*

Fig. 8.1.3

## *FRENO "F6." Brake*

*Versione "ST"per alte velocita' e frenature sia statiche sia dinamiche*

*"ST" Version for high speeds and static+dynamic braking*

*PER RIDUTTORI: RE 311 -RE 511 -RE1012 -RE 1512*
*For gearboxes:*

*1-FLANGE ATTACCO MOTORI*
*Motor connection flanges*

*2-GIUNTI ATTACCO MOTORI*
*Motor connection couplings*

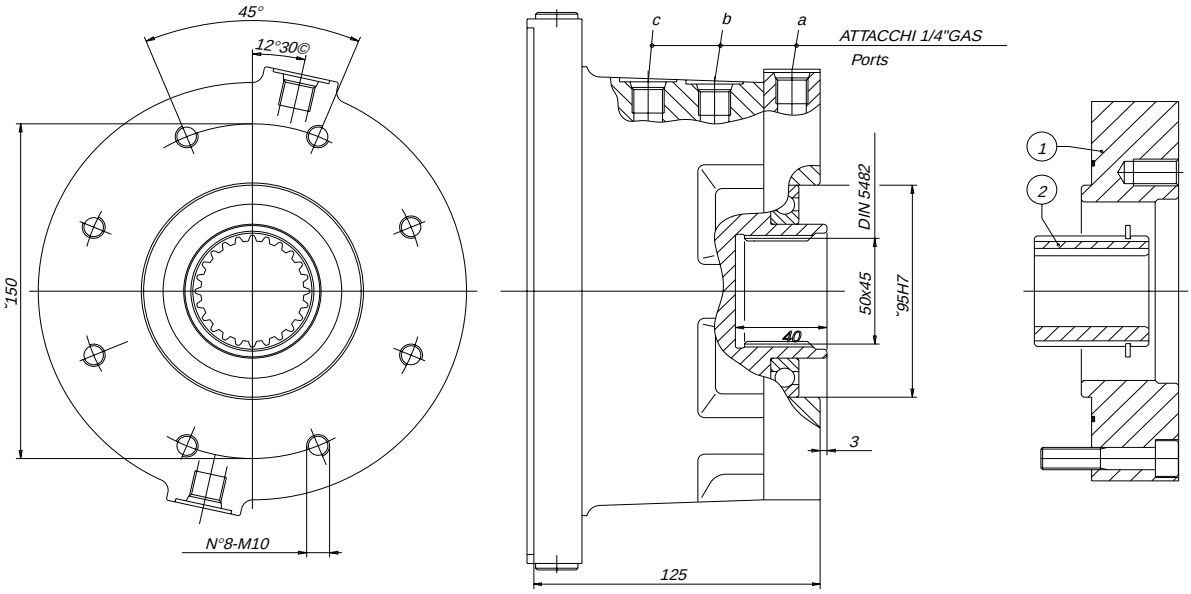


| TIPO/Type | | F604 | F606 | F608 | F610 | F612 |
|---|---|---|---|---|---|---|
| Coppia frenante statica - static braking torque | daNm | 40 | 60 | 80 | 100 | 120 |
| Coppia frenante dinamica-dynamic braking torque | daNm | 28 | 42 | 56 | 70 | 84 |
| Press. apertura - min.release press. | bar | 30 | | | | |
| Press. massima - max. pressure | bar | 250 | | | | |
| Velocita' max in ingr.-max input speed CONT. | rpm | 3000 | | | | |
| Velocita' max in ingr.-max input speed INT. | rpm | 4500 | | | | |

| |
|---|
| IMPIEGO STATICO DEL FRENO |
| Static brake using |
| a - livello olio freno<br>- oil level of brake<br>b - comando freno<br>- brake releasing port |
| IMPIEGO DINAMICO DEL FRENO |
| Dinamic brake using |
| a - attacco per il raffreddamento del freno con olio idraulico<br>- port for cooling brake by hydr.oil.<br>- portata - flow: 2,5-3 l/min<br>b - comando freno - brake releasing port<br>c - attacco al serbatoio - port for connection to tank |

Fig. 8.1.4

**ATTENZIONE!!**

Per non provocare una azione frenante (dato il tipo di freno) la pressione di esercizio non deve mai scendere al di sotto della pressione minima di apertura del freno.

**ATTENZIONE!!**

I riduttori e gli eventuali freni lamellari sono spediti dalla **Dinamic Oil S.p.A.** privi di olio.
Sarà compito dell'utilizzatore effettuarne il riempimento (vedi capitolo "Lubrificazione").
Controllare il corretto serraggio di tutte le viti con filettatura metrica ISO (vedi tabella "Coppie di serraggio viti").

***ATTENTION!!***

*Given the type of brake, the operating pressure should never drop below the minimum brake opening pressure to avoid the braking action.*

***ATTENTION!!***

*The gear units and multi-disk brakes are shipped without oil by* ***Dinamic Oil S.p.A.***
*The utilizer is responsible for filling such devices (see chapter " Lubrication").*
*Check that all the bolts with ISO metric threads are correctly tightened (see table " Torque setting bolts").*

### 8.1.1 - Tabella valori coppie di serraggio viti con filettatura a passo grosso

### *8.1.1 - Tightening torque values table for screws with large pitch threads*

| Ø nominale vite *Ø screw nominal* | Coppia max - *Max. torque* kg·m | | | Coppia max - *Max. torque* N·m | | |
|---|---|---|---|---|---|---|
| | 8.8 | 10.9 | 12.9 | 8.8 | 10.9 | 12.9 |
| M4 x 0.7 | 0.31 | 0.43 | 0.52 | 3.03 | 4.21 | 5.09 |
| M5 x 0.8 | 0.60 | 0.84 | 1.01 | 5.88 | 8.23 | 9.9 |
| M6 x 1 | 1.03 | 1.46 | 1.75 | 10.1 | 14.3 | 17.1 |
| M8 x 1.25 | 2.48 | 3.49 | 4.19 | 24.3 | 34.2 | 41 |
| M10 x 1.5 | 4.97 | 7 | 8.37 | 48.7 | 68.6 | 82 |
| M 12 x 1.75 | 8.46 | 11.9 | 14.30 | 83 | 116 | 140 |
| M14 x 2 | 13.46 | 18.92 | 22.70 | 131 | 185 | 222 |
| M16 x 2 | 20.40 | 28.80 | 34.60 | 200 | 282 | 339 |
| M 18 x 2.5 | 28.40 | 40.0 | 48.0 | 278 | 392 | 470 |
| M20 x 2.5 | 39.6 | 55.60 | 66.60 | 388 | 545 | 652 |
| M22 x 2.5 | 53 | 74.5 | 90 | 519 | 730 | 882 |
| M24 x 3 | 70 | 98 | 117 | 686 | 960 | 1146 |
| M27 x 3 | 101 | 142 | 170 | 900 | 1392 | 1666 |
| M30 x 3 | 138 | 193 | 232 | 1352 | 1891 | 2273 |

## 8.2 - Controlli di primo avviamento

Dopo un breve periodo di funzionamento senza carico (5-10 minuti) controllare i livelli degli olii e ripristinare quelli che eventualmente si sono ridotti. Controllare inoltre il serraggio delle viterie dei vari fissaggi.

- Controllare il corretto funzionamento dei freni e che gli stessi blocchino/sblocchino al momento opportuno.

## *8.2 - First start-up checks*

*After a brief period of operation (5-10 minutes) check the oil levels under no- load conditions, topping up those levels which have gone down check that nuts and bolts of the various attachments are properly tightened.*

- *Check that the brakes lock and release at the right time and all operate correctly.*

# 9 Manutenzione
# *Maintenance*

Nota

La manutenzione del riduttore può essere di tipo ordinario o straordinario.

**ATTENZIONE!!**

Tutte le operazioni di manutenzione ordinaria e straordinaria devono essere eseguite in sicurezza.

## 9.1 - Manutenzione ordinaria

E' compito dell'operatore eseguire tutte quelle operazioni di manutenzione considerata ordinaria qui di seguito riportate.

- Sostituire l'olio del riduttore e dell'eventuale freno lamellare dopo un periodo di funzionamento di circa 100 ore (rodaggio).
- Effettuare il lavaggio interno del gruppo con liquido detergente.
- Controllare che sul tappo magnetico del riduttore e dell'eventuale freno lamellare non siano state attratte parti metalliche di dimensioni inconsuete.
- Controllare periodicamente (una volta al mese circa) i livelli olio ed eventualmente effettuare i dovuti rabbocchi.

**ATTENZIONE!!**

Se al momento di uno dei regolari controlli dei livelli olii si dovesse riscontrare sul riduttore, o con freno lamellare o con motore idraulico o su entrambi, un aumento dei livelli stessi, significa che è presente un trafilamento di olio o dalle tenute del freno o dalla tenuta rotante del motore. Contattare immediatamente la **Dinamic Oil S.p.A.**

*Note*

*The gear unit maintenance can be routine or unscheduled.*

***ATTENTION!!***

*All routine or unscheduled maintenance activities must be carried out under safety conditions.*

## *9.1 - Routine maintenance*

*The operator is responsible for routine maintenance and must carry out the following activities.*

- *After a brief operating period of about 100 hours (breaking-in), change the oil in the gear unit and the multi-disk brake if installed.*
- *Wash the interior of the unit with cleaning liquid.*
- *Check that there are not metallics parts with unusual dimension in the magnetic plug of the gear unit and in any multi-disk brake.*
- *Periodically check the levels ( about once a months) and top up if necessary.*

***ATTENTION!!***

*When checking the oil levels in gear units equipped with a multi-disk brake or hydraulic motor or both, if the levels have reisen, this means that oil is penetrating either from the brake seals or from the motor rotary seal.*
*Immediatly contact the* ***Dinamic Oil S.p.A.***

- Effettuare il cambio dell'olio al riduttore. Il riduttore deve essere caldo per favorire l'uscita dell'olio. Non mescolare olii diversi tra di loro.

Nota

I successivi cambi di olio dovranno essere effettuati ogni 2000-2500 ore di funzionamento e comunque ogni anno.

Nota

La **Dinamic Oil S.p.A.** consiglia di tenere una scheda per ogni gruppo (che sarà debitamente compilata ed aggiornata) riportante ogni singola operazione di manutenzione eseguita.

## 9.2 - Sostituzione olio

Con l'aiuto dello schema al par. 2.2 - Posizione di montaggio - individuare il tappo di scarico olio del riduttore o del freno lamellare a seconda della loro configurazione.

- Svitare il tappo di scarico e quello di carico per favorire l'uscita dell'olio dal riduttore;
- dopo aver svuotato l'olio rimontare il tappo di scarico;
- se il riduttore è dotato di freno lamellare ripetere la stessa operazione sul freno lamellare (vedi sottoparagrafo 8.1.1;
- con un liquido detergente apposito (consigliato dal produttore dei lubrificanti) lavare l'interno del riduttore;
- se il riduttore è dotato di freno lamellare ripetere la stessa operazione sul freno lamellare procedendo nel seguente modo:
- immettere il liquido nel riduttore e nell'eventuale freno lamellare
- rimontare i tappi di carico
- fare girare per qualche minuto ad alta velocità
- svuotare di nuovo il riduttore e l'eventuale freno lamellare dal liquido detergente.

Per il riempimento vedi cap. 7 "Lubrificazione".

- *Change the oil in the gear unit while it is hot so that it is easier to drain.*
  *Do not mix different types of oil.*

*Note*

*Subsequent oil changes will be made every 2000-2500 hours of operation or, in any case, each year.*

*Note*

***Dinamic Oil S.p.A.*** *recommends you keep a card for each unit (which should be duly filled in and updated) indicating all the maintenance work carried out.*

## *9.2 - Oil change*

*With the help of the diagram in para. 2.2 - Installation positions - identify the oil discharge cap of the gear unit or the laminar brake according to their configuration.*

- *Unsrew the drain plug and the filler plug to help drain the oil from the gear unit;*
- *once the oil has been emptied, replace the drain plug;*
- *if the gear unit is equipped with a multi-disk brake, repeat the same operation with the multi-disk brake (see sub-paragraph 8.1.1);*
- *wash the interior of the gear unit with a suitable cleaning liquid (that is recommended by the lubricant manufacturer).*
- *if the gear unit is equipped with a multi-disk brake, repeat the same operation with the multi-disk brake, as follows:*
- *put liquid into the gear unit and the multi-disk brake (if any)*
- *replace the filter plugs*
- *run the device for few minutes at a high speed*
- *remove the cleaning liquid again from the gear unit and the multi-disk brake (if any).*

*See chapter 7 " Lubrication" for filling instruction.*

## 9.3 - Manutenzione straordinaria

Per le operazioni di manutenzione straordinaria rivolgersi direttamente alla **Dinamic Oil S.p.A.**

E' rigorosamente vietata dalla **Dinamic Oil S.p.A.** l'apertura del riduttore per ogni tipo di operazione che non sia compresa nella manutenzione ordinaria.

La **Dinamic Oil S.p.A.** declina ogni responsabilità per tutte quelle operazioni non comprese nella manutenzione ordinaria che abbiano arrecato danni a cose o persone.

## 9.4 - Manutenzione freni

### 9.4.1- Sostituzioni lamelle o tenute per freni lamellari

Per le operazioni di sostituzione lamelle o tenute per freni lamellari rivolgersi direttamente alla **Dinamic Oil S.p.A.**

La **Dinamic Oil S.p.A.** vieta di compiere questa sostituzione sui propri gruppi.

## 9.5 - Demolizione e smaltimento

### 9.5.1 - Demolizione riduttore

Nel momento in cui si decida di rottamare la macchina occorre rendere la stessa inoperante eseguendo le seguenti operazioni:

- svuotare completamente il riduttore dagli olii in esso contenuti;
- smontare i vari componenti;
- distaccare l'eventuale motorizzazione.

### 9.5.2 - Smaltimento residui

Sarà cura dell'utilizzatore smaltire gli imballi, i pezzi sostituiti, i componenti del riduttore, il riduttore stesso, i lubrificanti in ottemperanza agli obblighi dettati dalle norme vigenti nel paese di installazione della macchina.

Trattamento dei rifiuti

- materiali riciclabili (ferro,alluminio, rame) sono da destinarsi ad appositi centri di raccolta autorizzati;
- materiali plastici e gomma sono da destinarsi alle discariche od agli appositi centri di raccolta;
- olii esausti da destinarsi al Consorzio Obbligatorio olii Esausti, per quanto riguarda l'Italia.

## *9.3 - Unscheduled maintenance*

*For all special maintenance, please contact **Dinamic Oil S.p.A.** directly.*

***Dinamic Oil S.p.A** prohibits the gear unit to be opened to carry out any operation that is not included in routine maintenance procedures.*

***Dinamic Oil S.p.A** do not undertake any liability for all those operations out of routine maintenance which may have caused damages to people or things*

## *9.4 - Brake maintenance*

### *9.4.1 - Replacing blades or seals for laminar brakes*

*To replace the blades or seals for laminar brakes contact **Dinamic Oil S.p.A.** directly.*

***Dinamic Oil S.p.A.** prohibits this operation to be performed on its units.*

## *9.5 - Scrapping and disposal*

### *9.5.1 - Scrapping the gear motor*

*When you decide to scrap the machine, it is necessary to make it inoperative by carrying out the following procedure:*

- *empty all the oils contained in the gear unit;*
- *disassemble the components;*
- *disconnect any motor drives that may have been installed.*

### *9.5.2 - Disposing of the refuse*

*It is the user's responsibility to dispose of the packing, the replaced parts, the gear unit's components, the gear unit itself and the lubricants to fulfil the obligations stipulated by rules in force in the country where the machine is installed.*

*Treating the refuse*

- *recyclable materials (iron, aluminium, copper) must be taken to the special authorised collection points;*
- *plastics and rubber must be taken to the local dump or to special collection points;*
- *used oils must be taken to the special collection points.*

# 10 Inconvenienti e rimedi
# *Problems and solutions*

## 10.1 - Inconvenienti, cause, rimedi

Nel caso di un malfunzionamento del riduttore consultare la tabella di seguito riportata per l'individuazione dell'inconveniente, la sua causa e l'eventuale rimedio. In caso l'inconveniente persista rivolgersi direttamente al centro di assistenza più vicino della **Dinamic Oil S.p.A.**

## *10.1 - Troubleshooting*

*In the event of the gear unit malfunctioning, please refer to the table below to identify the cause of the problem and possible remedy. If the problem persists contact the nearest* ***Dinamic Oil S.p.A.*** *assistance centre.*

| Inconveniente | Possibile causa | Rimedio |
|---|---|---|
| Con motore in funzione l'albero in uscita non ruota | - Errato montaggio motore<br>- Anomalia interna<br>- Freno bloccato | - Controllare accoppiamento tra riduttore e motore<br>- Rivolgersi alla **Dinamic Oil S.p.A.**<br>- Verificare circuito idraulico |
| Perdite di olio dallo sfiato durante il funzionamento | - Livello troppo alto<br>- Sfiato in posizione errata<br>- Possibile usura tenute freno lamellare o motore idraulico | - Abbassare il livello dell'olio<br>- Verificare la posizione dello sfiato<br>- Rivolgersi alla **Dinamic Oil S.p.A.** |
| Trafilamento olio dalle tenute | - Tappo sfiato occluso<br>- Irrigidimento tenute per prolungato ricovero<br>- Tenute usurate o danneggiate | - Svitare e pulire con cura il tappo<br>- Pulire la zona e ricontrollare il trafilamento dopo pochi giorni<br>- Sostituire tenute |
| Eccessive vibrazioni | - Il riduttore non è installato correttamente<br>- La struttura di accoppiamento è troppo debole<br>- Anomalia interna | - Verificare i fissaggi e le coassialità<br>- Rinforzare la struttura<br>- Rivolgersi alla **Dinamic Oil S.p.A.** |
| Eccessiva rumorosità | - Anomalia interna | - Rivolgersi alla **Dinamic Oil S.p.A.** |
| Eccessivo riscaldamento | - Mancanza di ventilazione<br>- Potenze termiche elevate | - Togliere cofanature<br>- Inserire ricircolo olio |

| Inconveniente | Possibile ausa | Rimedio |
|---|---|---|
| Il freno lamellare non si sblocca | - La pressione non arriva al freno<br>- Anomalia interna<br>- Non c'è pressione nel circuito | - Verificare il collegamento al circuito idraulico<br>- Rivolgersi alla **Dinamic Oil S.p.A.**<br>- Verificare il circuito idraulico |
| Il freno lamellare non si blocca | - Pressione residua nel circuito idraulico | - Verificare circuito idraulico |
| Il freno lamellare non frena | - La pressione arriva al freno<br>- Usura delle lamelle | - Verificare il circuito idraulico<br>- Rivolgersi alla **Dinamic Oil S.p.A.** |

| *Problem* | *Possible cause* | *Solution* |
|---|---|---|
| *With motor running the output shaft doesn' t turn* | *- Incorrect motor assembly*<br>*- Internal malfunction*<br>*- Brake blocked* | *- Check coupling between gear unit motor*<br>*- Contact the **Dinamic Oil S.p.A.***<br>*- Check the hydraulic circuit* |
| *Oil leak from breather during operation* | *- Level too high*<br>*- Incorrect breather position*<br>*- Possible wear of multi-disk brake seals or hydraulic motor* | *- Lower oil level*<br>*- Check breather position*<br>*- Contact the **Dinamic Oil S.p.A.*** |
| *Oil leak from seals* | *- Clogged breather plug*<br>*- Stiffening of seals due to prolonged storage*<br>*- Damaged or worn seals* | *- Unscrew and thorougly clean the plug*<br>*- Clean the area and check for leakage again after a few days*<br>*- Replace the seals* |
| *Excessive vibration* | *- Gear unit incorrectly installed*<br>*- Coupling structure weak*<br>*- Internal malfunction* | *- Check the connection and in-line configuration*<br>*- Strengthen the structure*<br>*- Contact the **Dinamic Oil S.p.A.*** |
| *Excessive noise* | *- Internal malfunction* | *- Contact the **Dinamic Oil S.p.A.*** |
| *Excessive heating* | *- No ventilation*<br>*- High thermal power* | *- Remove fairing*<br>*- Insert oil circulation* |
| *Multi-disk brake does not release* | *- No pressure to the brake*<br>*- Internal malfunction*<br>*- No pressure in circuit* | *- Check connection to hydraulic circuit*<br>*- Contact the **Dinamic Oil S.p.A.***<br>*- Check hydraulic circuit* |
| *Multi-disk brake does not jam* | *- Pressure delivered to brake* | *- Check hydraulic circuit* |
| *Disk brake does not brake* | *- No pressure to the brake*<br>*- Worn brake pads* | *- Check hydraulic circuit*<br>*- Contact the **Dinamic Oil S.p.A.*** |

# Pressure Vessels
# Rules and Regulations

*DISCLAIMER: The information provided in this presentation should be used as a guide only. Olaer do not accept any responsibility with regard to the accuracy of the content or any legal ramifications which could arise from using of this document. It is the responsibility of the end user to make sure they comply with their local OH&S state requirements.*

# Accumulators – Typical OH&S Requirements

- **End users** - accumulator has to be registered with end user's local OH&S authority, however for the Mine Safety & NOPSA you need to have a register of equipment on site  This type of registration is known as item or plant registration.

  End users have to fill out a form and pay registration fee to the local OH&S & just a form needs to be filed with Mine Safe.

- **Sellers and on sellers** – have to provide the end user with all documentation required to comply with any Regulations.

# Need for Regulation

- Accumulators are pressure equipment subject to extreme operating conditions; large pressure and temperature variations, rapid cycles, aggressive environment, etc.

- Pressure equipment needs to be regulated through design, registration, commissioning, regular inspections and maintenance.

- **If requirements in regulations are obeyed, potential for risk will be reduced**.

- Questions to ask: **“What If?”** and “**Who would be liable?”**

# Reference

| State | Local Authority | Act | Regulation | Acceptable Design | Plant to be registered | Design to be registered |
|---|---|---|---|---|---|---|
| NSW | WorkCover NSW | OH&S Act 2000 No 40 | OH&S Regulation 2001 | AS1210-2010 | Ch5 Div 3 section 107 | Ch5 Div 3 section 113 |
| WA | WorkSafe WA | OH&S Act 1984 | OH&S Regulations 1996 | AS1210-2010 | Part 4 Div 4.2 Schedule 4.2 | Part4 Div 4.2 Schedule 4.1 |
| SA | SafeWork SA | OHS and Welfare Act 1986 | OHS and Welfare Regulations 1995 | Schedule 3 | Division 3.4 Schedule 4 Part 2 | Division 3.4 Schedule 4 Part 1 |
| QLD | Workplace Health and Safety QLD | Workplace Health and Safety Act 1995 | Workplace Health and Safety Regulation 1997 | - | Part 2 Div 2 Schedule 3 | Part 2 Div 3 Schedule 4 |
| VIC | WorkSafe VIC | OH&S Act 1985 | OH&S (Plant) Regulations1995 | AS1210-2010 | Schedule 2 | Schedule 2 |

# Registration Information

| | Plant Registration | | Design Registration | | | |
|---|---|---|---|---|---|---|
| State | Form | Hazard Level | Form | Hazard Level | Code | 3rd party design verification |
| NSW | | A, B or C | | A, B, C or D | AS1210 | Yes |
| WA | | A, B or C | | A, B, C or D | AS1200 | Yes |
| SA | | A, B or C | | A,B,C, or D | AS1200 | Yes |
| VIC | | A, B or C | | A, B, C or D | AS1200 | Yes |
| QLD | | A, B or C | | A, B, C or D | ANY | Yes |

# AS4343-1999

- **AS4343-1999:** Pressure Equipment – Hazard Levels. Australian Standard last updated in 1999.

- **Hazard Level –** means of categorising pressure equipment based on energy potential (i.e. potential of harm). Based on product of design pressure and volume.

- **Example:** calculate Hazard Level for a 20ltr hydraulic accumulator with design pressure of 34.5MPa containing non-harmful substance.

  - V = 20L
  - P= 34.5MPa
  - PV = 690MPaL

# AS4343-1999 cont.

PV = 690MPaL
Standard provides a look up table:

| PV (MPa x L) | 0-30 | 30-100 | 100-1000 | 1000-30mil | 30mil-100mil |
|---|---|---|---|---|---|
| Hazard Level | E | D | C | B | A |

**Answer: Hazard Level C**

- **Note:** hydraulic accumulators contain fluid and gas. Hazard level of substance with higher hazard level needs to be taken into account. Above table is for non-harmful gas (nitrogen at any temperature is considered non-harmful).

# INSERVICE INSPECTION

# AS3788-2001

- As a risk control measure employers must ensure that pressure equipment is inspected in accordance with AS3788-2001.

- This Standard specifies the requirements for the inspection of pressure equipment.

- Each owner is responsible for ensuring that the extent and frequency of inspection is appropriate and adequate for the continued safe and economic operation of the pressure equipment. This may require the seeking of expert outside advice.

# AS3788-2001 Inspection Periods

- **AS3788-2001** establishes normative periods of inspections for pressure vessels as seen in table below.

| Pressure Equipment | Commissioning Inspection Required? | First Yearly Inspection Required? | External Inspection | Nominal Internal Inspection | Extended Internal Inspection |
|---|---|---|---|---|---|
| 10.1 Accumulators with non-corrosive, non-toxic and non flammable contents | | | | | |
| PV < 100 MPaL | N | N | - | - | - |
| 100 < PV < 200 MPaL | Y | N | - | - | - |
| PV > 200 MPaL | Y | Y | 2 | 12 | 12 |
| 10.2 Other (i.e. Chem. Service) | Y | Y | 2 | 4 | 12 |

# INSPECTIONS

- This to be carried out by a competent person
- In accordance with AS3788

# Site Audit Form

Company Name:

**DATE OF AUDIT::**

## Accumulator Inspection Schedule in Accordance with AS3788 and Work Cover Regulations

| MACHINE ID | ACCUMULATOR Serial/No | MANUFACTURER | MANUFACTURE STANDARD NUMBER (AS1210, ASME) | CAPACITY Litres | Max Rated Pressure | DATE of Manufacture | DATE of LAST INSPECTION | Condition of Mounting Brackets | Accumulator Mounted on Rubber Cushion | General Comments |
|---|---|---|---|---|---|---|---|---|---|---|
| | | | | | | | | | Yes/No | |
| | | | | | | | | | Yes/No | |
| | | | | | | | | | Yes/No | |
| | | | | | | | | | Yes/No | |
| | | | | | | | | | Yes/No | |
| | | | | | | | | | Yes/No | |
| | | | | | | | | | Yes/No | |
| | | | | | | | | | Yes/No | |
| | | | | | | | | | Yes/No | |
| | | | | | | | | | Yes/No | |
| | | | | | | | | | Yes/No | |
| | | | | | | | | | Yes/No | |
| | | | | | | | | | Yes/No | |
| | | | | | | | | | Yes/No | |
| | | | | | | | | | Yes/No | |
| | | | | | | | | | Yes/No | |
| | | | | | | | | | Yes/No | |
| | | | | | | | | | Yes/No | |
| | | | | | | | | | Yes/No | |
| | | | | | | | | | Yes/No | |
| | | | | | | | | | Yes/No | |
| | | | | | | | | | Yes/No | |

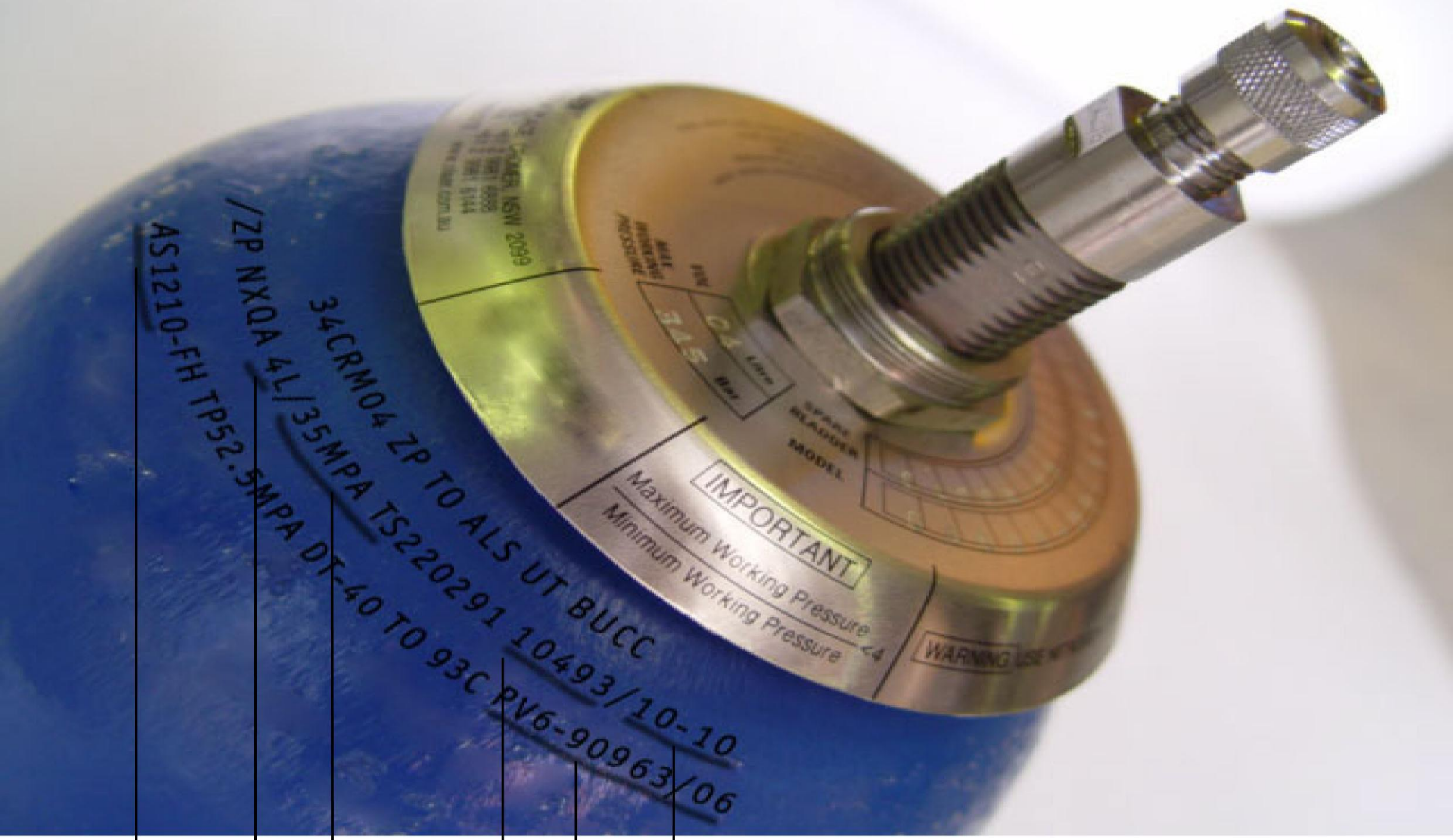


Date of Manufacture

Design registration number

Serial Number

Max Allowable working pressure

Accumulator Volume

Design Standard

OLAER GROUP

# ESCAPE MASTER
## Controlled Descent Device
### By Moxham Industrial Pty. Ltd.

MOXHAM

**Fibreglass enclosed box, with escape device, braided rope, karabiner, ready for installation and use on elevated platform vehicles. platforms, towers, or high places.**

**5/4/52 with 16 metre rope (52.5ft.)**
**5/5/83 with 25 metre rope (83ft.)**

# OWNER'S MANUAL

## INSTALLATION AND OPERATING INSTRUCTIONS

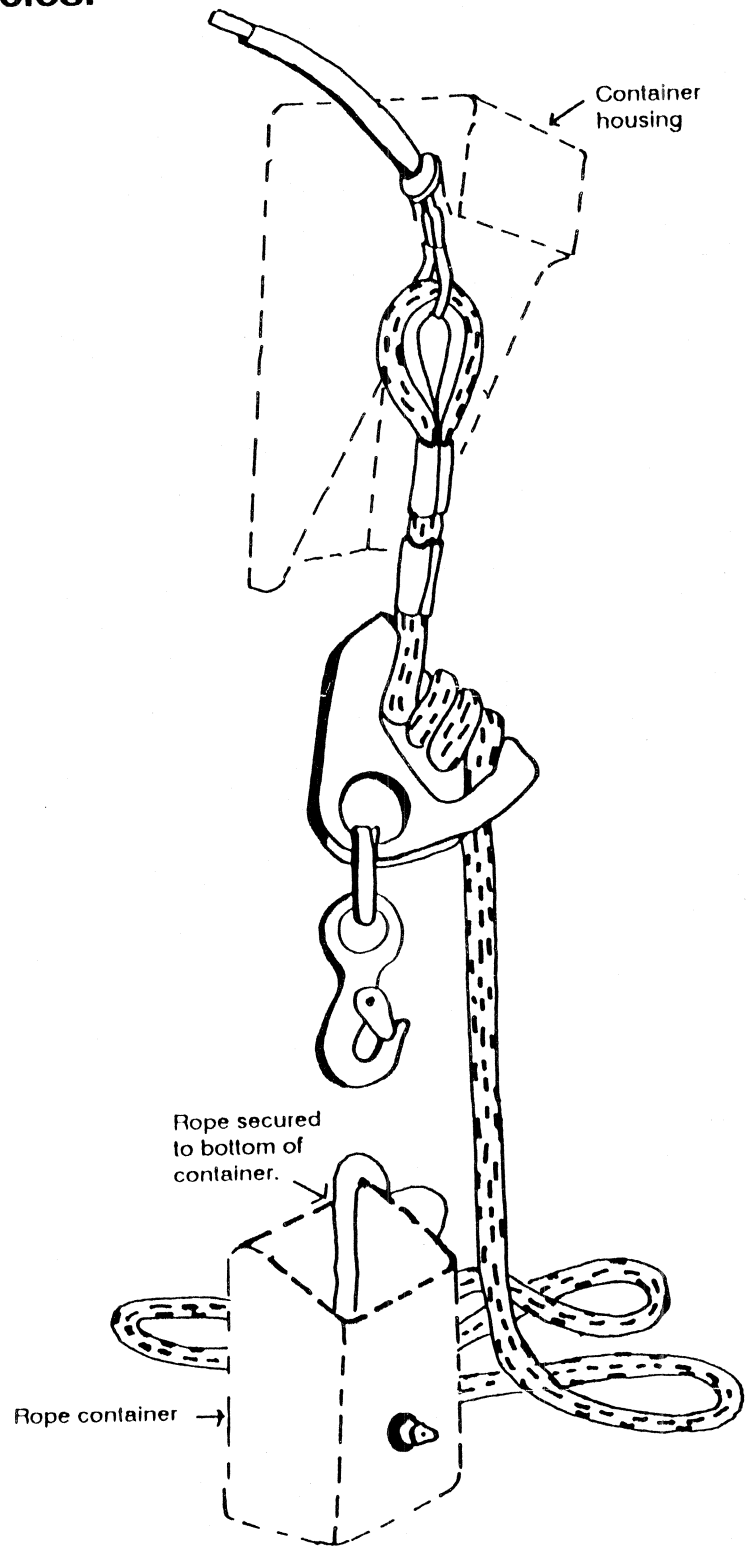

# INSTALLATION PROCEDURE

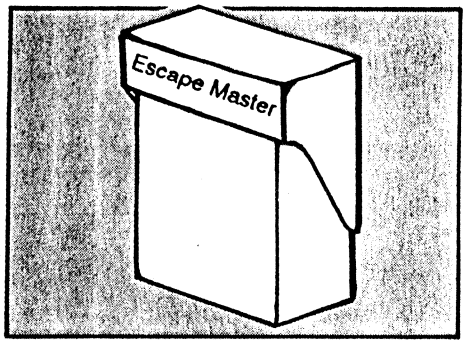


**ESCAPE-MASTER** is an escape kit to be installed in elevating platform vehicles, platforms, towers, vans or wherever people are required to work in high places.

## METHOD 'A'

Attachment of the escape rope is via a plastic covered wire lanyard to a standard anchor point inside E.P.V. bucket. The stowage box is attached to the outside of the bucket to store escape device and rope which automatically falls to earth when released.

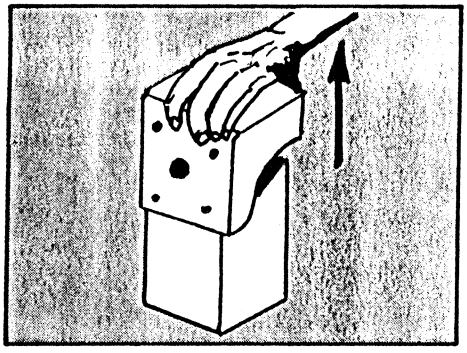

1 Remove lynch pin and plastic retaining ring then separate bottom stowage box from container housing (lid).

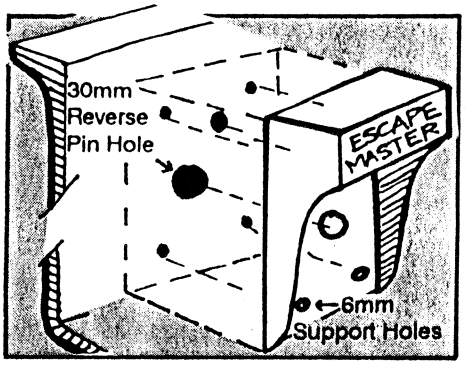


2 Using the top section (lid) as a template, mark, then drill out the four bolt holes (6mm) and (30mm) hole for fixed release pin and retaining ring.

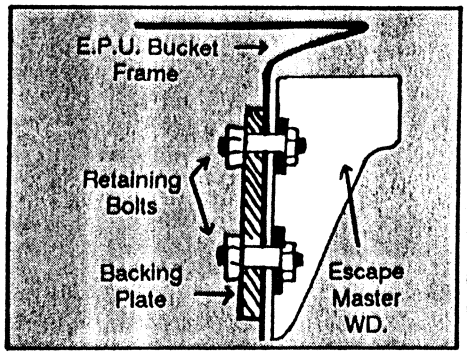


3 Using bolts and panel washers (backing discs) supplied, fasten container housing (lid) onto outside of bucket.

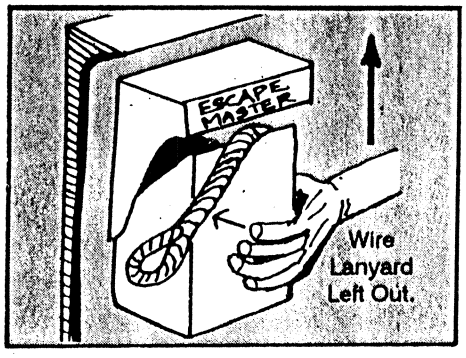


4 Leaving most of the wire lanyard out, re-attach the bottom section to the top housing, taking care to ensure the tapered fixed release pin is fitted through the bucket wall, then refit the plastic ring and lynch pin inside bucket.

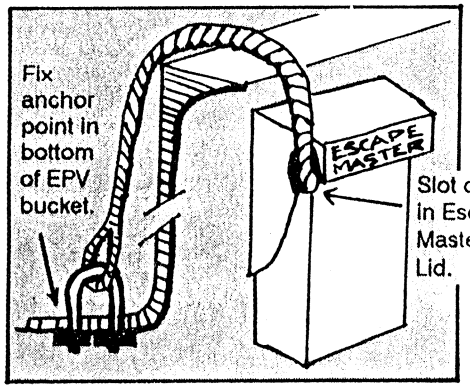


5 Attach the plastic/wire lanyard to the standard fixed anchor point inside the bucket using bow shackle, lock nut and split pin supplied – a slot can be cut out in either side of the container housing to facilitate positioning of the wire. Finally, attach the installation sticker (with arrow) immediately above the release pin – inside the bucket.

ACCESSORIES SUPPLIED: 4 × Plated Bolts 4 × Spring Washers 4 × Panel Washers (Backing Discs) 1 × Bow Shackle, Lock Nut and Split Pin

## METHOD 'B'

Attachment of the escape rope is to an eye bolt inside the container housing (lid) which is fastened through the side wall of the bucket.

1 Follow Step '1' in Method 'A' – separate stowage box from container housing (lid).

2 Follow Step '2' in Method 'A' – also mark and drill a 12mm hole about 50mm from top and 60mm from either side to take the eye bolt supplied.

3 Follow Step '3' in Method 'A' and Step '2' above, fasten container housing (lid) onto outside of bucket and fit eye bolt.

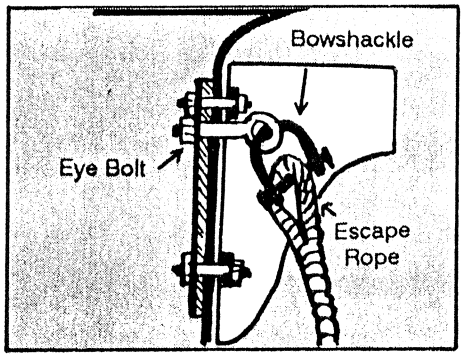


4 Attach the eye on the end of the escape rope to the installed eye bolt by means of shackle supplied.

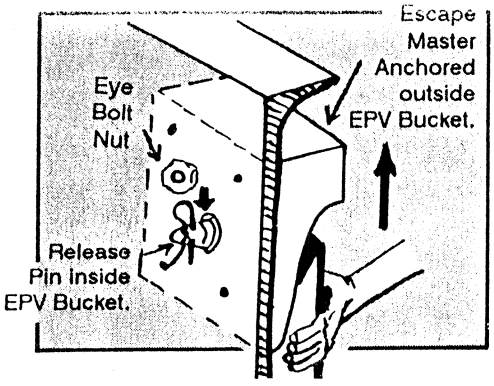


5 Ensure that rope and descent control device are correctly stored inside of box, then attach the bottom section to the top housing, taking care to ensure the tapered fixed release pin is fitted through the bucket wall – then refit the plastic ring and lynch pin inside bucket. Finally, attach the instruction sticker (with arrow) immediately above the release pin, inside the bucket.

## IMPORTANT

As all of the escaper's weight will be on the eye bolt inside the container housing, it is essential that this eye bolt is supported by a substantial backing plate.

Accessories Supplied – 1 × Eye Bolt 1 × Shackle

# OPERATING INSTRUCTIONS

**ESCAPE-MASTER** is a controlled descent device (C.D.D.) operating on braided man made fibre rope breaking strength in excess of 2 tonnes, supplied as a complete kit in a fibre glass container. The safety product is for escape or rescue from high places, its operation is simple and efficient but the following operating procedures should be understood.

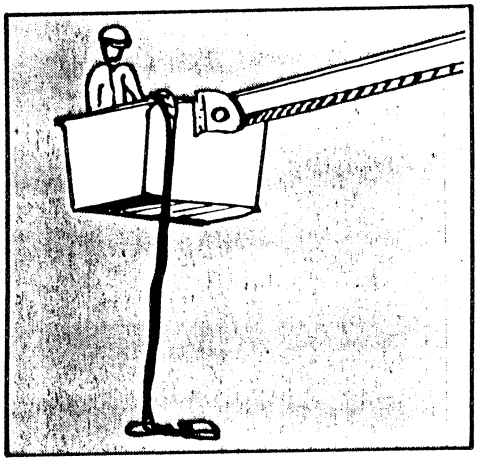

1 Check to be sure that when released the rope (and bottom half of container) will have a clear descent all the way to the ground.

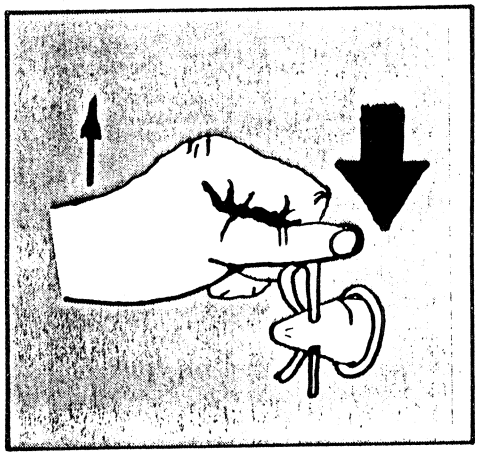

2 Remove the lynch pin found on the inside of the bucket. This should release the rope and container.

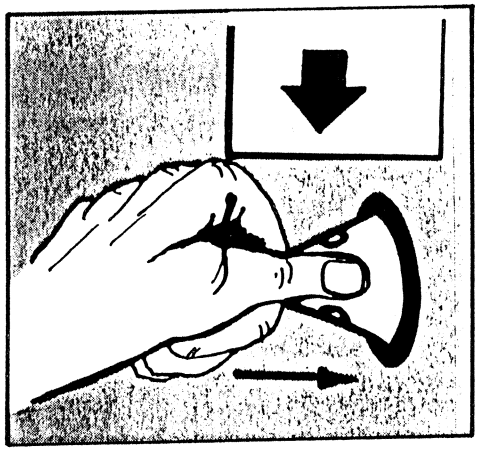

3 In the event there is no instant release - press the end of tapered fixed release pin.

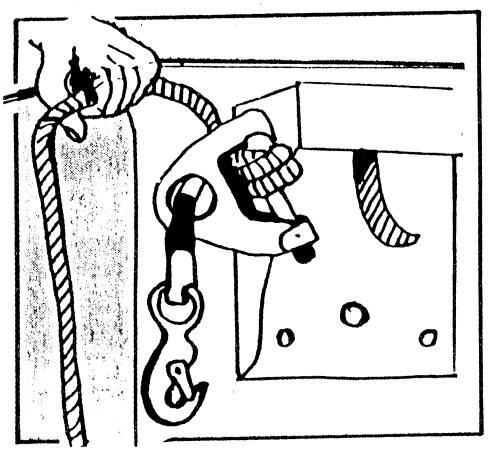

4 Grip the descent device, make sure it is at the top end of the escape rope, and has at least 2 coiled rope loops.

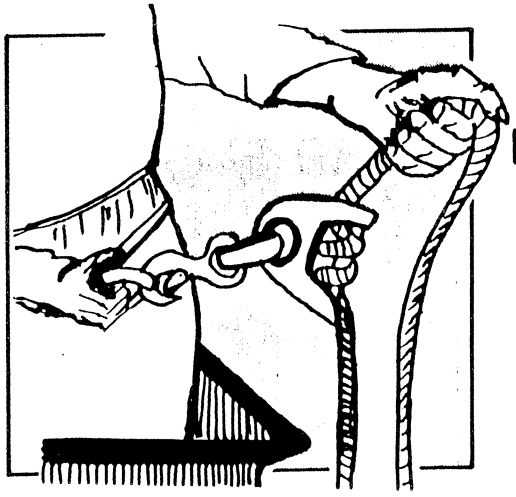

5 Connect the snap hook of the descent device to a side 'D' ring on your safety belt.

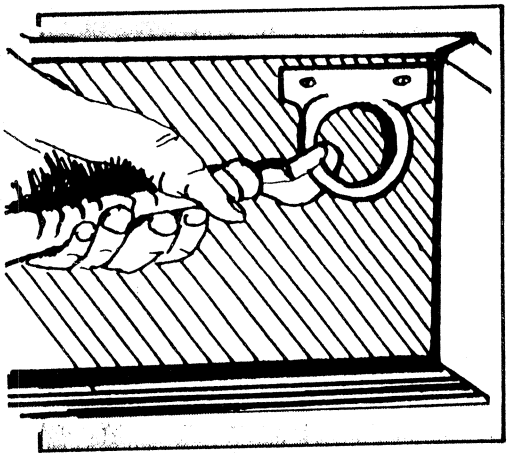

6 Release your safety belt from its anchor within the bucket.

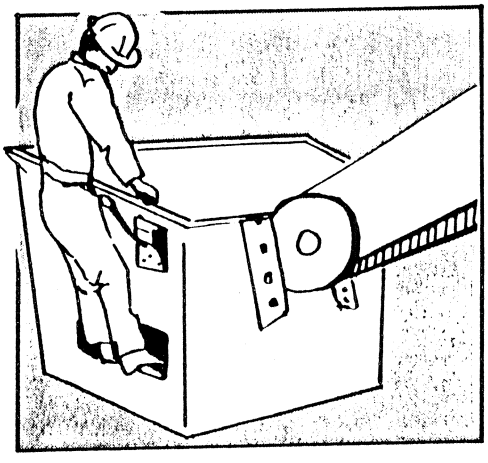

7 Now, climb outside the bucket, maintaining a good hand grip until your body weight is taken up by the escape rope.

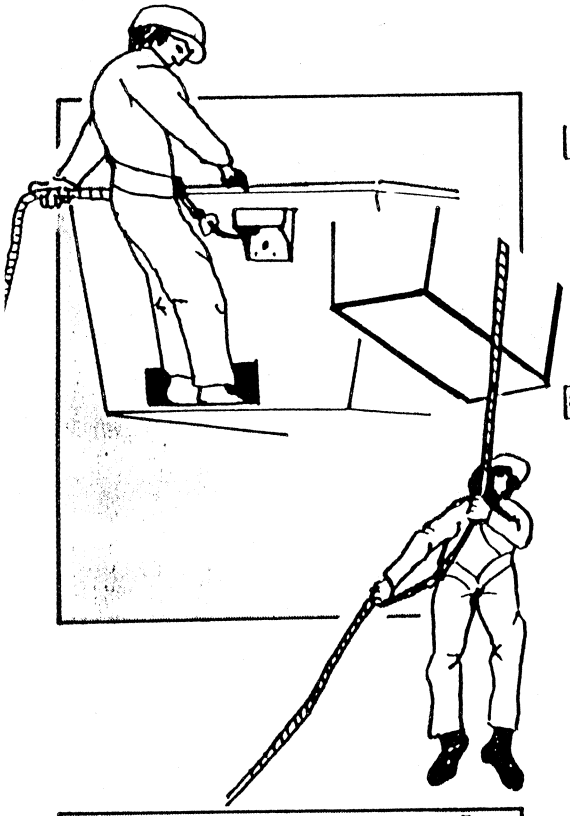

8a Take a firm grip of the tail of the escape rope (below the C.D.D.), let go of the hand grip and start the descent.

8b Control the rate of descent by raising the tail of the escape rope and applying light tension, using one hand.

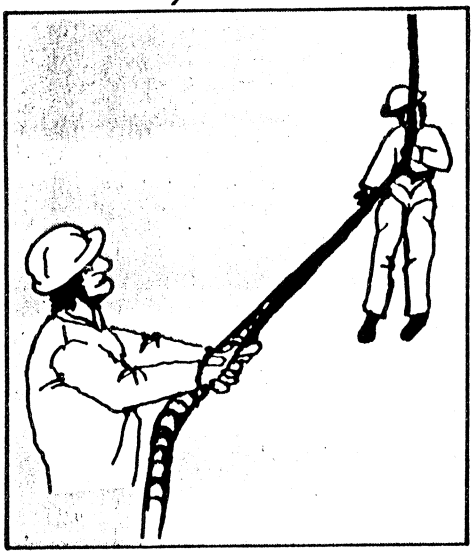

9 If necessary the descent can be controlled by a person on the ground who only needs to apply a light tension to the rope, keeping the excess rope tail to one side.

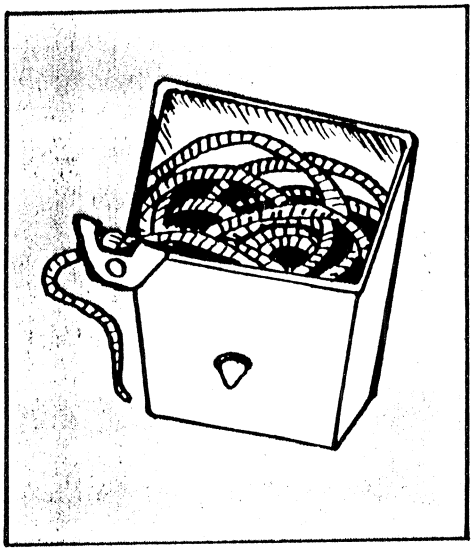

10 Refit the escape rope. The metal device should be returned to the upper end of escape rope to approximately 300mm of the anchor.

NOTE:
Escape-Master is available in two models
5/4/52 with 16 metre rope (52.5ft.)
5/5/83 with 25 metre rope (83ft.)

# Chapter 6

| Occupational Health & Safety | 6 |
|---|---|

## TABLE OF CONTENTS


| Subject | Page |
|---|---|
| Health and safety precautions | 2 |
| Safety symbol: | 2 |
| Anti Freeze: | 2 |
| Batteries: | 2 |
| Jump-starting and use of auxiliary (booster) batteries: | 2 |
| Jump starting procedure: | 2 |
| Electric shocks: | 3 |
| Exhaust fumes: | 3 |
| Fire and welding: | 4 |
| First Aid: | 4 |
| High-Pressure Air & Lubrication Equipment: | 4 |
| Oils and Greases: | 4 |
| Suspended Loads: | 5 |
| Workshop Tools and Equipment: | 5 |

## HEALTH AND SAFETY PRECAUTIONS

The information presented in this section does not infer there are any particular hazards associated with your vehicle. It is given as a guide to the general precautions that should be taken in any workshop environment when working on machines of this nature and in the course of their maintenance.

### SAFETY SYMBOL:

The universal symbol is used throughout this manual to indicate information, which is essential for health and safety of all operating personnel.

The repair and maintenance of machinery can involve physical hazards or other risks to health. The following is a list of these hazards and the precautions necessary to avoid them.

The list is only general but all other operations, procedures and the handling of materials should be carried out in accordance with the requirement of health and safety laws, which is the responsibility of the Owner, Operator and maintenance team.

### ANTI FREEZE:

Anti-freeze may be absorbed though the skin in toxic or harmful quantities.
If swallowed, seek medical attention immediately.
Some types, i.e., isopropanol, ethylene glycol and methanol are flammable.

### BATTERIES:

Gases released during charging are explosive. Never use naked flames or allow sparks near charging or recently charged batteries.

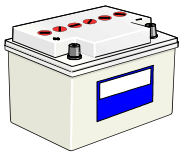

Disconnection:
Disconnect the negative battery lead from battery first. The positive cable must always be disconnected last.

Reconnection:
Always reconnect the positive battery cable first.

### JUMP-STARTING AND USE OF AUXILIARY (BOOSTER) BATTERIES:

Do not jump-start maintenance free batteries if in a deeply discharged state as internal short circuits may occur.

### JUMP STARTING PROCEDURE:

Always follow this procedure when connecting a booster battery.
Take care not to cause sparking which could ignite hydrogen gas being given off by the batteries.

1. Apply the park brake, turn off ignition, lights and other electrical loads.
2. If the slave battery is mounted on another vehicle, ensure that the vehicles are not touching.
3. Ensure that the slave battery voltage is compatible with the vehicle battery.
4. Ensure that adequate ventilation is available to the vehicle and slave batteries.
5. Connect positive terminal or slave battery group to positive terminal of the discharged battery group.
6. Connect negative terminal or slave battery group to negative terminal of the discharged battery group.
7. Attempt to start the casualty vehicle.
8. Once the vehicle has started, remove the negative lead from both battery groups.
9. Remove positive lead from both battery groups.

## ELECTRIC SHOCKS:

Electric shocks can result from the use of faulty electrical equipment or from the misuse of equipment even in good condition.

Ensure that electrical equipment is maintained in good condition and frequently inspected and tested.

Ensure that flexes, cables, plugs and sockets are not frayed, kinked, cut, cracked or otherwise damaged.

Ensure that electrical equipment is protected by the correct rated fuse and if used outside an earth-leakage circuit breaker is used.

Never misuse electrical equipment and never use equipment that is in any way faulty. The results could be fatal.

Use reduced voltage equipment (110 or 24 volt) for inspection and working lights where possible.

Ensure that the cables of mobile electrical equipment cannot be trapped in moving parts of the vehicle.

## EXHAUST FUMES:

These contain asphyxiating, harmful and toxic chemicals and particles such as carbon oxides, nitrogen oxides, aldehydes, leads and aromatic hydrocarbons. Engines should only be run under conditions of adequate extraction or general ventilation and not in confined spaces.

## FIRE AND WELDING:

Observe strict fire safety when storing and handling flammable materials or solvents, particularly near electrical equipment or welding processes.
Ensure before using electrical or welding equipment that there is no fire hazard present.
Have a suitable fire extinguisher available when using welding or heating equipment.
Special precautions must be taken before any welding or cutting takes place on vessels which have contained combustible materials, e.g. fuel tanks.

## FIRST AID:

It is desirable for someone in the workshop to be trained in the first aid procedures.
Splashes or particles in the eye should be flushed with clean water for at least ten minutes and medical attention sought.
Soiled skin should be washed with soap and water.
Inhalation affected individuals should be removed to fresh air immediately.
If hazardous material has been swallowed or if the effects of exposure to hazardous materials persist, consult a doctor immediately.
Do not induce vomiting (unless indicated by the manufacturer).

## HIGH-PRESSURE AIR & LUBRICATION EQUIPMENT:

Always keep high-pressure equipment in good condition and regularly maintained, particularly at joints and unions.
Never direct a high or low) pressure nozzle at the skin as the fluid may penetrate to the underlying tissue, etc, and cause serious and potentially fatal injury.

## OILS AND GREASES:

Prolonged and repeated contact with mineral oil may result in the removal of natural fats from the skin, leading to dryness, irritation and dermatitis.
Gross and prolonged contact, especially with used engine oil, which contains potentially harmful contaminants, may cause skin cancer.

Where there is a risk of eye contact, e.g., by splashing, eye protection should be worn, for example, chemical goggles or face shields; in addition, an eyewash facility should be provided.

Adequate means of skin protection and washing facilities should be provided.

Repeated or prolonged skin contact should be avoided by wearing protective clothing, including impervious gloves where practical. Particular care should be taken with used oils and greases containing lead.

First Aid treatment should be obtained immediately for open cuts and wounds.

Apply barrier cream before each work period to help when removing oil from the skin.

Use proprietary hand cleaners only if they can be removed from the skin using water.

Overalls must be cleaned regularly. Discard clothing that cannot be cleaned and footwear that has become impregnated.

In the event of a skin condition occurring consult a doctor and tell him/her that your work involves using oil.

When using solvents ensure good ventilation; avoid breathing fumes, vapours, spray-mists and keep containers tightly sealed. Do not use in confined spaces. When spraying materials containing solvents, for example paints, adhesives or coatings use extraction ventilation or personal respiratory protection in the absence of adequate general ventilation.

Do not apply heat or flame except under specific and detailed manufacturer's instructions.

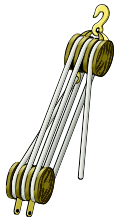

## SUSPENDED LOADS:

Never work under an unsupported, suspended or raised load. For example, jacked up vehicle, suspended engine, etc.

Always ensure that lifting equipment e.g., jacks, hoists, axle stands, slings, etc are adequate and suitable for the job, in good condition and regularly maintained.
NEVER improvise lifting tackle.

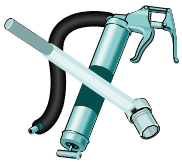

## WORKSHOP TOOLS AND EQUIPMENT:

Only use tools and equipment for their intended purposes.

Never overload equipment such as hoists, jacks, axles stands or lifting slings. Damage caused by overloading is not always immediately apparent and may result in a fatal failure the next time the equipment is used.

Never use damaged or defective tools or equipment.
Always wear suitable eye protection when using grinding, chiselling or sand blasting equipment.

Always wear a suitable breathing mask when using sand blasting equipment, working with asbestos based materials (such as brake linings) or using spraying equipment.

# NIFTY-LIFT
# Elevating Work Platform NL240KTF

# RISK ASSESSMENT

## 1. INTRODUCTION

A Hazard and Risk Assessment for Elevating Work Platform NL240KTF has been prepared based on visual inspection, operation and study of manuals.

The Hazard and Risk Assessment addresses only those areas which relate to operation and maintenance of the unit in general terms and does not identify hazards which arise due to:

(a) Specific work practices employed by Boom Sherrin

(b) Operation of the EWP on specific sites

(c) Major maintenance of the EWP requiring specialised work practices or methods

(d) Errors or omissions in design or manufacture – other than those which were observed during visual inspection.

It is not possible to foresee every circumstance that may arise when operating this or any other EWP. For this reason, Boom Sherrin should supplement this assessment with further assessments prepared to address site-specific operation and their own work practices. A regular review of the assessment is also required with input from operators who are assigned to the unit.

## 2 GENERAL OVERVIEW

In general

The attached Hazard ID and Risk Assessment details the above and other issues.

Prepared by _____

_____.

# NIFTY-LIFT
# Elevating Work Platform NL240KTF
# RISK ASSESSMENT

| | | |
|---|---|---|
| **DATE OF ASSESSMENT:** | **PLANT DESCRIPTION**<br>**EWP NL240KTF** | **ORGANISATION:** |
| **ASSESSMENT CONDUCTED BY:** | **RISK ASSESSMENT METHOD USED:**<br>**(As follows)** | ADDRESS: |

***THE FOLLOWING AREAS OF THE ELEVATING WORK PLATFORM ARE PINCH POINTS AND PERSONNEL SHALL STAY WELL CLEAR OF THESE AREAS WHEN THE MACHINE IS IN OPERATION. ALL PERSONNEL WORKING ON THIS EQUIPMENT SHALL BE MADE AWARE OF THE PINCH POINTS AS PART OF NORMAL TRAINING.***

| No | Hazard Identified (describe the situation or parts of plant which could give rise to injury or illness) | Is there any Risk? Y/N | Describe the risk control measures already implemented | Boom Sherrin risk classification 1= High 2= Medium 3= Low | Proposed risk control measures | Are the control measures practicable Yes/No | Action | Confirmation on the necessary action has been completed |
|---|---|---|---|---|---|---|---|---|
| **1.0** | **Pinch Points & Crushing Hazards** | | | | | | | |
| **1.1** | **Pinch point between turret and bottom boom at turret** | Y | Optional Signage "Pinch Point" | 2 | Train operators. Do not access deck area whilst tower is in use. | Yes | Boom Sherrin | |
| **1.2** | **Pinch point between bottom & top boom at turret.** | Y | Optional Signage "Pinch Point" | 3 | Train operators to stand clear when operating. | Yes | Boom Sherrin | |
| **1.3** | **Pinch point between basket and Rest.** | Y | Automatic limiting control fitted | 3 | Train operators to stand clear when operating. | Yes | N-L | |
| **1.4** | **Pinch point between boom and turret while boom is lowering** | Y | Optional Signage "Pinch Point" | 2 | Train operators to stand clear when | Yes | Boom Sherrin | |

| | | | | | | | | |
|---|---|---|---|---|---|---|---|---|
| | | | | | operating. | | | |
| **1.5** | **Pinch point between bottom boom and levelling rod** | Y | Optional Signage “Pinch Point” | 3 | Train operators to stand clear when operating. | Yes | Boom Sherrin | |
| **1.6** | **Pinch point between basket and fly boom when basket is slewed** | Y | Optional Signage “Pinch Point” | 2 | Train operators to keep clear when operating | Yes | Boom Sherrin | |
| **1.7** | **Pinch point between basket and fly boom when basket is trimming** | Y | Optional Signage “Pinch Point” | 2 | Train operators to keep clear when operating | Yes | Boom Sherrin | |
| **1.8** | **Pinch point between turret and handrails when slewing using manual base controls** | Y | Optional Signage “Pinch Point” | 2 | Train operators to keep clear when operating | Yes | Boom Sherrin | |
| **1.9** | **Pinch point between ground and jackleg when being lowered** | Y | Crushing Hazard Signage Standard. | 2 | Train operators to carefully check area is clear from obstructions before lowering legs. | Yes | Boom Sherrin | |
| **1.0A** | **Pinch point between pad and jackleg when retracting** | Y | Optional Signage “Pinch Point” | 3 | Train operators to stand clear when operating. | Yes | Boom Sherrin | |
| **1.1A** | **Pinch point between out & down jacklegs when retracting** | Y | Optional Signage “Pinch Point” | 3 | Train operators to stand clear when operating. | Yes | Boom Sherrin | |
| **1.2A** | **Pinch point between basket & tray when retracting tele boom** | Y | Optional Signage “Pinch Point” | 3 | Train operators to stand clear when operating. | Yes | Boom Sherrin | |
| **1.3A** | **Pinch point between bottom boom & bottom boom rest** | Y | Optional Signage “Pinch Point” | 3 | Train operators to stand clear when operating. | Yes | Boom Sherrin | |
| **1.4A** | **Pinch point between top boom & top boom rest** | | Optional Signage “Pinch Point | 3 | Train operators to stand clear when operating. | Yes | Boom Sherrin | |
| **1.5A** | **Pinch point between top boom** | Y | Optional Signage | 3 | Train operators to | Yes | Boom | |

| | | | | | | | | |
|---|---|---|---|---|---|---|---|---|
| | **& bottom boom at elbow** | | "Pinch Point" | | stand clear when operating. | | Sherrin | |
| **1.6A** | **Pinch point between bottom boom & cab rack (if fitted)** | Y | Optional Signage "Pinch Point" | 3 | Train operators to stand clear when operating. | Yes | Boom Sherrin | |

| **No** | **Hazard Identified (describe the situation or parts of plant which could give rise to injury or illness)** | **Is there any Risk Y/N** | **Describe the risk control measures already implemented** | **Boom Sherrin risk classification 1= High 2= Medium 3= Low** | **Proposed risk control measures** | **Are the control measures practicable Yes/No** | **Action** | **Confirmation on the necessary action has been completed** |
|---|---|---|---|---|---|---|---|---|
| **2.0** | **Structural Failure due to:** | | | | | | | |
| **2.1** | **Design/manufacturing errors** | Y | Design AS1418.10:2011 | 1 | Inspect critical areas | Yes | Boom Sherrin | |
| | | | | | Nominate critical areas in manual | Yes | N-L | |
| | | | | | Nominate frequency | Yes | N-L | |
| | | | | | Nominate criteria | Yes | N-L | |
| **2.2** | **Overload of Basket** | Y | SWL Nominated in Large Visible Signage on Basket.<br>Basket loads calculated and tested to withstand 50% overload.<br>Overload protection designed with compliance to AS1418.2011. | 1 | - | Yes | N-L | |
| | | Y | - | 1 | Train operators to check loads being elevated in basket is below Safe working load. | Yes | Boom Sherrin | |

| | | | | | | | | |
|---|---|---|---|---|---|---|---|---|
| **2.3** | **Levelling System failure.** | Y | - | 1 | Boom Sherrin to adequately inspect and maintain tower as per technical manual. | Yes | Boom Sherrin | |
| **2.4** | **Operation outside specification** | Y | Specification in the manual. All Signage on tower clearly specifies the SWL. | 1 | Train operators not to overload the Basket. | Yes | Boom Sherrin | |
| | | Y | Provide level gauges easily visible to the operator. | 1 | - | Yes | N-L | |
| **2.5** | **Damage from impact.** | Y | OH&S policy | | Train operators not to damage tower in operation. | Yes | Boom Sherrin | |
| **2.6** | **Mechanical Component Failure** | Y | EWP thoroughly inspected and tested during commissioning. | 1 | Daily and Periodical Service Inspections and maintenance must be carried out by qualified personnel. | Yes | Boom Sherrin | |
| **2.7** | **Catastrophic Hydraulic Failure.** | Y | Critical Hydraulic Cylinders designed with double counterbalance check valves to prevent tower movement with sudden failure. | 1 | Periodical Inspection of Vehicle Hydraulics specified in Technical Manual. | Yes | N-L | |
| | | Y | - | 1 | Periodical Service Inspections and maintenance must be carried out by qualified personnel. | Yes | Boom Sherrin | |

| No | Hazard Identified ( describe the situation or parts of plant which could give rise to injury or illness) | Is there any Risk Y/N | Describe the risk control measures already implemented | Boom Sherrin risk classification 1= High 2= Medium 3= Low | Proposed risk control measures | Are the control measures practicable Yes/No | Action | Confirmation on the necessary action has been completed |
|---|---|---|---|---|---|---|---|---|
| **3.0** | **Electrocution protection** | | | | | | | |
| **3.1** | **Operators electrocuted due to Contact with two phases or HV/LV or live and earth.** | Y | Operators must be certified for Live Line work. Operators should be trained for works near live power lines, and obey clearance guidelines. | 1 | Train and certify operators. Environmental conditions must be suitable for live power line work. Tower must be tested and certified periodically as per regulations. | Yes | Boom Sherrin | |
| | | Y | HV insulated boom to 132kV. HV tested and certified. | 1 | - | Yes | N-L | |
| **3.2** | **Fibreglass Basket Insulated to 5kV. Risk of Fire in basket.** | Y | Gel-coat on Fibreglass Basket contains fire retardant. | 2 | - | Yes | N-L | |
| | | Y | Safety Harness must be worn at all times. | 2 | Basket and gel-coat must be maintained in good condition. | Yes | Boom Sherrin | |

| No | Hazard Identified ( describe the situation or parts of plant which could give rise to injury or illness) | Is there any Risk Y/N | Describe the risk control measures already implemented | Boom Sherrin risk classification 1= High 2= Medium 3= Low | Proposed risk control measures | Are the control measures practicable Yes/No | Action | Confirmation the necessary action has been completed |
|---|---|---|---|---|---|---|---|---|
| **4.0** | **Persons injured due to OVERTURNING the vehicle caused by:** | | | | | | | |
| **4.1** | **Placement on soft or unstable ground.** | Y | Stability test in conformance with AS1418.10:2011 | 1 | Train operators to correctly use dunnage blocks under stabiliser legs on soft ground. | Yes | Boom Sherrin | |
| | | Y | Option available for level alarm to trigger if: tower tilts beyond 5 degrees in use, or setup outside of 5 degrees from level. | 1 | Boom Sherrin should purchase level alarm option. | Yes | N-L | |
| **4.2** | **Failure to level the truck to within 5 degrees of horizontal** | Y | Level Gauges provided in 2 planes as standard. Optional out of level alarms. | | Train operators to correctly setup and level vehicle as per technical manual. | Yes | N-L | |
| **4.3** | **Design/manufacturing errors** | Y | Design AS1418.10:2011 Stability designed to within 5 degrees of horizontal and 50% overloaded. Stability and structurally checked in worst case operating angles. Certification provided. | 1 | - | Yes | N-L | |
| **4.4** | **Overloading of Basket causing overturning.** | Y | SWL Nominated in Large Visible Signage on Basket. Tower is | 1 | Train operators to check loads being elevated in basket is | Yes | Boom Sherrin | |

| | | | | | | | | |
|---|---|---|---|---|---|---|---|---|
| | | | Stability tested to withstand 50% overload of SWL.<br>Overload protection designed with compliance to AS1418.10:2011. | | below Safe working load. | | | |
| **4.5** | **Failure to correctly setup Stabiliser Legs** | Y | Stabiliser legs are fully interlocked to tower functions, to ensure they are deployed, before tower can be raised. | 1 | - | Yes | N-L | |
| | | Y | Option available to ensure legs are fully extended and bearing load before tower is operated. | 1 | Boom Sherrin can purchase "Ground Sense" option for added safety. | Yes | Boom Sherrin | |
| **4.6** | **Failure to correctly setup Spring Suspension Lockouts (Suspension Lockouts are optional).** | Y | Spring suspension lockouts fully interlocked to tower functions, to ensure they are deployed, before tower can be raised. (Optional).<br>Std Double safety sensors shut down tower if primary sensors fail. Alarms trigger if primary sensors fail. | 1 | - | Yes | N-L | |
| **4.7** | **Operation outside of maximum wind speed.** | Y | Signage on tower clearly specifies the maximum wind speed. | 1 | Train operators to check wind speed and operate below max wind speed. | Yes | Boom Sherrin | |

| No | Hazard Identified ( describe the situation or parts of plant which could give rise to injury or illness) | Is there any Risk Y/N | Describe the risk control measures already implemented | Boom Sherrin risk classification 1= High 2= Medium 3= Low | Proposed risk control measures | Are the control measures practicable Yes/No | Action | Confirmation the necessary action has been completed |
|---|---|---|---|---|---|---|---|---|
| **5.0** | **Slipping on tray deck, or alighting from vehicle.** | Y | Non skid deck plate. Non slip Steps provided standard. Signage provided for safe usage of steps. | 3 | Operators to wear appropriate non slip boots. Provide Instruction of safe access/egress. | Yes | Boom Sherrin | |
| **5.1** | **Tripping on tray deck** | Y | Keep deck clear | 3 | Train operators | Yes | Boom Sherrin | |
| **6.0** | **Falling From Basket** | Y | Safety Harness attachment points provided standard on Basket. | 1 | Operators to ensure safety harness is worn at all times, and correctly maintained. | Yes | Boom Sherrin | |
| **7.0** | **Certification of Operators** | Y | Trained by N-L | 1 | Periodic assessment | Yes | Boom Sherrin | |

| No | Hazard Identified ( describe the situation or parts of plant which could give rise to injury or illness) | Is there any Risk Y/N | Describe the risk control measures already implemented | Boom Sherrin risk classification 1= High 2= Medium 3= Low | Proposed risk control measures | Are the control measures practicable Yes/No | Action | Confirmation the necessary action has been completed |
|---|---|---|---|---|---|---|---|---|
| **8.0** | **Basket Operator becomes incapacitated and requires emergency Rescue by ground Observer.** | | | | | | | |
| **8.1** | **Hand Pump and Base Controls, for use by Observer.** | N | Tower can be manually moved by a ground operator using Base Controls and Hand pump supplied Standard. | 2 | Provide Training for Operators. | Y | N-L & Boom Sherrin | |

| | | | | | | | | |
|---|---|---|---|---|---|---|---|---|
| **8.2** | **Option for operating tower using 2 independent Radio Remote Control handsets.** | N | Suppliers can purchase 2 independent radio remotes for quick and safe alternate operation of tower. | 3 | Purchase 2 Radio Remotes. Check They are functioning correctly Daily. | Y | Boom Sherrin | |
| **8.3** | **Option for Lowering Tower via Hydraulic Bleed Downs. Risk of Lowering tower into structures causing damage from impact.** | Y | Bleed Downs must be tightened for tower to function correctly on setup. | 2 | Provide Training for Operators. | Y | N-L & Boom Sherrin | |
| **8.4** | **Option for Lowering Tower using Emergency DC pump, when PTO pump pressure is unavailable.** | N | - | - | Purchase Emergency Pump Option. | Y | Boom Sherrin | |
| **8.5** | **Option for Lowering Tower using Hydraulic Pressure Stored in Accumulator Tank.** | N | - | - | Purchase Accumulator Tank Option. | Y | Boom Sherrin | |

| **No** | **Hazard Identified ( describe the situation or parts of plant which could give rise to injury or illness)** | **Is there any Risk Y/N** | **Describe the risk control measures already implemented** | **Boom Sherrin risk classification 1= High 2= Medium 3= Low** | **Proposed risk control measures** | **Are the control measures practicable Yes/No** | **Action** | **Confirmation the necessary action has been completed** |
|---|---|---|---|---|---|---|---|---|
| **9.0** | **Emergency Decent from Basket by operator (when other Emergency Tower Lowering options are not suitable).** | | | | | | | |
| **9.1** | **Optional CDD (Controlled Decent device). Risk of incorrect use, or poorly maintained.** | Y | Operator Training and maintenance to be provided by Boom Sherrin. | 1 | Train and certify operators in correct CDD usage. Properly maintain CDD and Harnesses. | Yes | Boom Sherrin | |
| **10.0** | **Remote Starting the Truck** | | | | | | | |
| **10.1** | **Remote Truck Engine Start/Stop Switch located in Basket and on Turret. Risk of** | N | Remote Start/Stop switch only operates after the tower is | 3 | - | Yes | N-L | |

| | | | | | | | | |
|---|---|---|---|---|---|---|---|---|
| | **starting the truck unintentionally.** | | switched on from the "System On" switch in the Cab. It will not function with the ignition key removed. | | | | | |
| **10.2** | **Remote Starting the Truck when not in Neutral. (Only in a manual vehicle). Potential risk allowing the vehicle to move whilst a driver is NOT in the cabin.** | Y | Remote Start/Stop will NOT function if the truck is taken out of Neutral. | 1 | - | Yes | N-L | |

| No | Hazard Identified ( describe the situation or parts of plant which could give rise to injury or illness) | Is there any Risk Y/N | Describe the risk control measures already implemented | Boom Sherrin risk classification 1= High 2= Medium 3= Low | Proposed risk control measures | Are the control measures practicable Yes/No | Action | Confirmation the necessary action has been completed |
|---|---|---|---|---|---|---|---|---|
| **11.0** | **CANBUS Wiring System (if fitted)** | | | | | | | |
| **11.1** | **Risk of moving EWP booms unintentionally due to CANBUS computerised control failure.** | N | Canbus wiring controls truck functions only. All Boom movement functions are controlled by the Radio Remote and Hydraulic Valve. | 3 | - | Yes | N-L | |
| **11.2** | **CANBUS Failure, or LCD screen in cab is not functioning, causing the EWP to shut down all functions. Operator is stuck in Basket whilst tower is in use.** | Y | Hand pump can be used to move tower. Or, Escape rope, or Emergency rescue box supplied - can be used to stow the legs and tower if full electric system has failed. | 3 | Training for Emergency Rescue Box must be carried out. *Note: For trained personnel only. No safety interlocks are present whilst using the Emergency rescue | Yes | N-L & Boom Sherrin | |

| | | | | | | | | |
|---|---|---|---|---|---|---|---|---|
| | | | | | box. | | | |
| **11.3** | **CANBUS Incorrectly energises an output due to failure.** | N | Emergency stop buttons will cease all hydraulic supply to tower, irrespective of electrical fault - utilising a secondary separately wired emergency stop circuit. | 2 | - | Yes | N-L | |
| **11.4** | **CANBUS Failure, causing truck functions to stop working.** | N | The canbus wiring is independent of all truck wiring. With canbus disconnected the truck can be driven normally. | 3 | - | Yes | N-L | |

## Declaration:

I have received induction training for the Nifty-Lift Model **NL240KTF** in conjunction with Boom Sherrin's procedure and I fully understand all Identified risks and requirements as set out on this Risk Assessment.

**Signature** _____

**Print Name** _____

SPECIALISED ELECTRICAL TESTING CO. P/L

Post Office Box 81,
Armadale North,
Victoria. 3143
Tel/Fax: (03) 9824 2799
Mobile: 0417 511 641
E: setco@ozemail.com.au
ABN: 19 079 318 755

**REPORT NUMBER: 12458**

INSULATION TESTS ON A MOBILE ELEVATING PLATFORM VEHICLE

**DATE OF TESTS: 13 JUNE 2012**

**REFERENCE:** Order No: 98529 dated 13 June 2012

**TESTED FOR:** Nifty Lift
42 Orchard St
Kilsyth VIC 3137

**EQUIPMENT TESTED:** Mobil Elevating Platform Vehicle with a fully insulated fiberglass bucket and upper and lower fiberglass booms with steel inlay at each end coated with white epoxy resin. The unit was equipped with an electrode assembly for leakage current measurement in the upper boom.

Make: Nifty Lift
Model: NL240KTF
Serial No: 43955
Safe Working Load: 350Kg

**NATURE OF TESTS:** Electrical tests as directed by Nifty Lift in accordance with AS 1418.10-2011 "SAA Crane Code Part 10 -Mobil Elevating Work Platforms and AS1913.1 High Voltage Test Techniques.

1. Earth Terminal Continuity Measurement Refer to clause 7.8.4
2. High Voltage Insulation Dry Tests on Insulating Inserts (Refer clauses 7.9.3, 7.9.4, 7.9.5)
3. Low Voltage Insulation Test (Refer to clause7.9.6)
4. Operators basket tests [Refer to clauses 7.9.7, 7.9.8)
5. Operators Basket Wet Tests (Refer to clause 7.9.12)
6. High Voltage Insulation Wet Tests on Insulation Inserts (Refer clause 7.9.11)

**CONCLUSION:** The above Mobile Elevating Platform Vehicle generally complied (see notes) with the electrical requirements of clauses section seven of AS 1418.10-2011 incorporating AS1931.1-1996 High Voltage Test Techniques.

**CERTIFICATION: 66/33kV/LV/LVBasket Dry, 33/33kV/LV/LVBasket Wet**

Signed: ..... Date: ....22-6-12

Bruce Winnen
Testing and Technical Support

This report consists of 4 pages.

# TEST RESULTS OF EPV SERIAL NO: 43955

1. EARTH TERMINAL CONTINUITY MEASUREMENT
The resistance measured between the vehicle's earth terminal and the lower boom chassis was less than 0.1 ohms, this being the maximum specified value.

2. ELECTRICAL TESTS ON INSULATING COMPONENTS
2.1 High Voltage Dry Insulation Test

A 50Hz test voltage was applied to all metal fittings above the upper steel insert with the insert bridged to the earthed vehicle chassis. The total leakage current measured at 20kV increments up to the test voltage of 140kVpk/√2(RMS calibrated) was less than 1μA/kV, this being the maximum specified value. Note the MEWP was in the prescribed test position for this model MEWP.

The Insulation Resistance of the Insulating Component to chassis at 5kV is 100,000 + MΩ minimum specified allowable of 1000MΩ.

The insulation Resistance of the test electrode to chassis at 500Vdc is 10,000+MΩ with the minimum specified allowable of 0.5+ MΩ.

The results are tabulated below. Ambient temperature: 13°C Humidity: 43%

| Applied Voltage kV pk/√2 | Leakage Current μA pk/√2 | Remarks |
|---|---|---|
| 20 | 13 | |
| 40 | 25 | |
| 60 | 37 | |
| 80 | 49 | |
| 100 | 61 | |
| 120 | 73 | |
| 140 | 85 | Held for 1 minute |
| 120 | 73 | |
| 100 | 61 | |
| 80 | 49 | |
| 60 | 37 | |
| 40 | 25 | |
| 20 | 13 | |

Note: The leakage current includes leakage along the following:
a External surface of the fiberglass boom
b Internal surface of fiberglass boom
c Internal control rods and control lines
d Hydraulic tool hoses
Note a capacitor shield was used during the test

2.2 Upper boom combined leakage current test
The MEWP was tested as above but without the capacitor shield. The leakage current was monitored from the chassis with the earth removed.

The total combined leakage current measured was 0.46mA/0.98mA at 42kV/84kV for a 66/kV/132kV certification)
Max allowable is 2.5mA.

2.3 LOWER BOOM INSERT TESTS

The insulation resistance of the insulation component to chassis at 5kV is 100,000+MΩ
The minim specified allowable 1,000MΩ.

A 50 Hz 70kV RMS test voltage was applied to the metal work above the lower boom the vehicle chassis being earthed. The MEWP was in the prescribed test position.

The lower boom insert withstood the application of the test voltage for 1 minute.
The total leakage current measured was 0.74mA at 21 kV (for 33kV certification) max allowable 2.5mA)

3 Low Voltage Insulation Test

A 50 Hz 5kV RMS test voltage was applied to temporary electrodes attached to the low voltage insulation of the boom and where applicable the outriggers, the vehicle chassis being earthed and the lower boom insert shorted.
Note the LV insulation was measured at 4.5 meters above ground level with the legs fully extended.

The low voltage insulation withstood the application of this voltage for 1 minute

4 BASKET INSULATION TESTS

4.1 Basket inner to outer insulation test

A 50 Hz 5kV RMS test voltage was applied to the inner surface of the basket with the outer surface earthed.

The basket insulation withstood the application of this voltage for 1 minute.
Note the basket does not meet the HV requirements, to comply a liner must be fitted.

4.2 Basket top to bottom insulation test

A 50 Hz 50kV RMS test voltage was applied to the top basket lip and the adjacent metal work with the base earthed.

The basket did meet this requirement

5 Basket wet test
After wetting the outside surface of the basket the above test was repeated at 38kV.
The basket did meet the requirements to be HV wet rated

6 Insert wet tests

6.1 Upper Insert
The upper insert was wetted and tested as prescribed in the test method with the lower insert bridged out.

Results of tests:

6.1a Insulation resistance after wetting insert measured was 50,000MΩ at 5kVdc (must be greater than 66MΩ to be 33kV rated)
The insert withstood an application of 36kV for 1 minute. The leakage current was measured at 21kV (phase to ground) was 0.25mA (max allowable 2.5mA)
The leakage current was steady though out the test.
Results of test: Passed

6.2 Lower Insert
The lower insert was wetted and tested as prescribed in the test method with the upper insert bridged out.

Results of test:

6.2a Insulation resistance after wetting insert measured was 100,000+MΩ at 5kVdc (must be greater than 66MΩ to be 33kV rated)
The insert withstood an application of 36kV for 1 minute. The leakage current was measured at 21kV (phase to ground) was 0.74mA (max allowable 2.5mA)
The leakage current was steady though out the test.
Results of test: Passed

Note: Water resistivity during the above tests was >100ΩM.

UNCERTAINTY It is estimated that the uncertainly of determination of voltage & current measurement is 5%.

Notes on compliance to AS1418-10-2011

The MEWP generally complied to AS1418-10-2011 yet did not comply for the following tests:

4.1 The basket is only HV insulated inner to outer when a liner is fitted.

**REPORT NUMBER: 12459**

# TESTS ON A BUCKET LINER

**DATE OF TEST: 13 JUNE 2012**

**SPECIALISED ELECTRICAL TESTING CO. P/L**

Post Office Box 81,
Armadale North,
Victoria. 3143
Tel/Fax: (03) 9824 2799
Mobile: 0417 511 641
E: setco@ozemail.com.au
ABN: 19 079 318 755

| | |
|---|---|
| REFERENCE: | Purchase Order Number 98529 dated 13/6/12 |
| TESTED FOR: | NIFTY LIFT |
| CLIENT | BOOM SHERRIN |
| EQUIPMENT TESTED: | MEWP Bucket Liner<br>Serial No: 150054<br>Type: Medium Density |
| Polyethylene | |
| NATURE OF TESTS: | High Voltage Withstand test in accordance with AS1418-10-2911 Section 7,9.9 |
| TEMPERATURE: | 13°C |
| HUMIDITY: | 43% |
| RESULT OF TEST | The MEWP Bucket Liner withstood an application of 50kV RMS, 50Hz for one (1) minute. |

Signed: _____ Date: 22-6-12

Bruce Winnen
Testing and Technical Support

This report consists of one (1) page